New in this Book

Additions:

Luxor:	Concord:	Classic:	Modifications
CBS6	CBS6	V27	CT-HANDICUT (cut and send toe kick)
CBS10	CBS10	V33	
DWR6	DWR6	BDE - Single Panel Only	
UC1821X84	UC1521X84		
SB36-FS	UC1821X84		
SB21	UREP24-9		
V24DL	UREP30-9		
V30DL	UREP24-10		
V36DL	UREP30-10		
V42DL	MCB27		
MCB30	OCM135		
LS36	MFLOCR		
V27			
V33			
BLB48/51			
UREP24-9			
UREP30-9			
UREP24-10			
UREP30-10			
WHA30/33			
WHA36/39			
WHP30/33			
WHP36/39			
V24-HA (Handicap Accessible)			
V30-HA (Handicap Accessible)			
V36-HA (Handicap Accessible)			
OCM135			

New Finishes:

Luxor:	Classic:
L03 - Misty Grey	M40 - Polar White
	M41 - Fossil Grey

***Please note that the following door styles and/or finishes are coming soon:**

Elegant Ocean Paint
Fashion Ocean Paint
Park Ave Ocean Paint
Milano Seaside
Milano Sand

***Please note, the Elegant Ocean Paint finish will be the same price as Elegant paint finishes**

***Please note following updated price codes**

Luxor	Luxor 5P	Country	Concord	Classic	Alvic	Vanguard	Surelle
L	P	R	A/B/C	E/F	H/I	V	SL

White Glove Delivery

Delivery service will cost $200, which includes a job site delivery fee of $125. This fee will cover up to the first 25 cabinets. Delivery will be to the ground floor only. Orders over 25 cabinets will incur an additional fee.

Please note; In-Home Delivery will have an extended lead time of up to 5 days.

Discontinuations:

Concord:	Classic:
OC30	AFG-1530
	AFG-1536
	AFG-1830
	AFG-1836
	AFG-1842
	AFG-3012
	AFG-3015
	AFG-3018
	AFG-3024
	AFG-3612
	AFG-3615
	AFG-3624
	AFG-3624

***Please note that the following door styles and/or finishes will no longer be available:**

Elegant Ocean Blue
Fashion Ocean Blue
Park Ave Ocean Blue

Table of Contents

Policies & Procedures....7
Cabinet Code Key....11
Collections and Styles....15
Displays & Samples....21

Luxor Collection
Door Styles & Specifications....26
Wall Cabinets....28
Base Cabinets....35
ADA Base Cabinets....39
Tall Cabinets....41
Accessories....44
Vanities & Medicine Cabinets....46
Fillers, Panels & Moldings....51

Country Collection
Door Styles & Specifications....55
Wall Cabinets....58
Base Cabinets....64
Tall Cabinets....67
Vanities & Medicine Cabinets....69
Fillers, Panels & Moldings....72

Concord Collection
Door Styles & Specifications....76
Wall Cabinets....80
Base Cabinets....93
Tall Cabinets....104
Accessories....108
Vanity Cabinets....112
Fillers, Panels & Moldings....115
Decorative Accessories....118

Classic Collection
Door Styles & Specifications....124
Wall Cabinets....128
Base Cabinets....137
Tall Cabinets....146
Accessories....149
Vanity Cabinets....150
Fillers, Panels & Moldings....152

Vanguard Collection....158
Surelle Collection....161

Marble & Granite Countertops....163

Modifications & Upgrades....167

Cabinet Care & Warranty....174

General Information

Policies & Procedures

Design & Pricing Software

CNC Cabinetry provides a product catalog compatible with 2020 Design & ProKitchen Design Software. These are downloadable via our website at www.cnccabinetry.com. CNC Cabinetry does not take responsibility for discrepancies between design software and CNC Cabinetry pricing.

Terms & Conditions Standards

All prices and specifications are subject to change. Payments may be made by ACH, Check, Debit/Credit Card, or Account Credit. To apply for credit, visit http://cnccabinetry.com/creditapp/.

Placing Orders

Placing orders can be done through our CABNET program, using the excel order form found on our website, ProKitchen or 2020 SKU lists. Orders will not be accepted over the phone. It is the dealers responsibility to review all quotes for accuracy and confirm before any order goes into production. If you would like the order to ship complete, please note that on quote and approval. If not indicated, order will ship with the available cabinets.

Once an order is placed and sent into production, NO CHANGES can be made. Canceled items/orders after approval, will have a 20% restocking fee (if the order has not yet been shipped). If the cabinets have been shipped or are already palletized, customer is responsible for freight costs back to CNC Cabinetry, if applicable, and a 25% restocking fee. Modified cabinets cannot be cancelled or returned. Unassembled cabinets that have been assembled by the customer cannot be returned. To cancel items from an order, please reach out to your customer service representative.

Delivery Options

- Pick-up.
- CNC truck.
- White-glove delivery available for an additional fee
- Common Carrier-Scheduled by CNC Cabinetry
    - If you have a preferred carrier please request it.
    - Please note that a per pallet fee will be applied to the order
- Common Carrier-Scheduled by Customer
    - If you need a residential lifetgate, please make note of this with your carrier
    - Please note that a per pallet fee will be applied to the order

Orders are automatically scheduled for the next available delivery day to your area unless specified otherwise.

A rescheduled delivery may result in a 20% fee.

Missed pick-up appointments after 48 hours will incur storage fees. After 30 days, orders will be returned to stock and a restocking fee of 25% will be charged.

Returns

There will be a 25% restocking fee for any returned cabinet. Shipping/Delivery charges will not be credited for any returns. It is the customer's responsibility to pay for shipping on return items. We will not credit any assembled cabinets by the customer, installed cabinets, or cabinets without their original box. Non-stock cabinets, custom modifications, wood hoods and countertops (post form and self-edge) are not returnable.

Once merchandise is received and inspected at our warehouse, a credit will be issued to your account for the returned merchandise less the 25% restocking fee. Please allow CNC 7-14 business days to process your credit. CNC will not accept returns after 30 days.

Damages

If a cabinet or countertop arrives damaged, a replacement order will be issued. In order for us to send out the replacement at no charge, pictures of the damages and your CNC sales order or P.O. number must be provided. If you do not have pictures of the damages, we will send the replacement/s for the full price and credit will be applied once we receive the pictures. CNC will not credit damaged cabinets after 14 business days of delivery.

Lead times

Cut-off time is 5:00pm Eastern time (M-TH) 3:00 pm Eastern time (Friday) for assembled and unassembled cabinets in order to meet standard lead times.

Extended lead times will occur for orders containing 100 cabinets or more. An extended lead time will also occur for any post-form or square-edge countertops with cut outs, cut-downs, or assembled miters and for stocked countertops over 12 pieces.

Shipping

CNC offers delivery service with our own fleet of trucks that will deliver within the local New Jersey area and areas within a 3-hour driving radius of our Davenport, Florida and Dallas, Texas facility for a minimum charge. Local deliveries will be assessed for pricing based on gas rates. Rates will be reassessed every 90 days. Deliveries are curbside only. Jobsite deliveries are available upon request for a minimal fee. White-glove delivery service is available upon request . Please contact your Customer Service representative for pricing and details.

Outside of our flagship facility areas, we ship via Common Carrier, where the best available pallet rate will be chosen. If a customer sends their own carrier to pick-up cabinets, CNC will not be responsible for filing damage claims. Please note that a per pallet fee will be applied to the order.

Floor load truckloads will be charged $250.00 per truckload.

Refused orders or missed pick-ups will be charged a fee to reschedule the delivery or pick-up.

Cabinet Code Key

B 24

Cabinet Code | Cabinet Width

24 30 x 24

Cabinet Width | Cabinet Height | Cabinet Depth

V 48 DD

Vanity Code | Cabinet Width | Door / Drawers

When looking at product codes it is important to note each element within the code in order to ensure you are ordering the correct cabinet piece. For example, the codes displayed above would translate to:

Base Cabinet; 24″ Wide x 34½″ High

Wall Cabinet; 24″ Wide x 30″ High x 24″Deep

Vanity Cabinet; 48″ Wide x 21″ Deep; Double Drawers

Additionally, it is important to note the following when selecting and ordering cabinets:

- Standard Wall cabinets are 12″ deep
- Refrigerator cabinets are 24″ deep
- Standard Base cabinets are 34½″ high and 24″ deep
- Add door thickness for total cabinet depth
- Vanity Cabinets are 32½″ high for Country Collection; 34½″ high for Luxor, Concord and Classic Collection
- Standard Vanity Cabinets are 21″ deep
- Handicap Accessible/Removable cabinets are 32.5″ tall and are indicated with 'HA' or 'HR' at the end of a product code

Wall Cabinets

3030 - Wall Cabinet

CW2430 - Corner Wall Cabinet

BLW 27/3030 - Blind Wall Cabinet

WS30 - Wall Shelf

WSQ2430 - Sqaure Corner Wall Cabinet

WEC1230 - Wall End Cabinet

PR - Plate Rack

WR - Wine Rack

WSP - Wall Spice Rack

MW3030 - Microwave Cabinet

Base Cabinets

B30 - Base Cabinet

DB12 - Drawer Base Cabinet

BLB36/39 - Blind Base Cabinet

CSF/CSFFL - Diagonal Corner Sink Front/Floor

CSB36 - Corner Sink Base

CAR33 - Lazy Susan Corner Base Cabinet

SB24 - Sink Base

BWBK15 - Waste Basket Cabinet

BTC2412 - Angle Base End Cabinet

BEC24 - Base End Cabinet

BSP9 - Base Spice Rack

B9-HA - Base; Handicap Accessible

SB36-HR - Base; Handicap Removable

Tall Cabinets

UC2424x84 - Utility Cabinet

OV3384 - Oven Cabinet

Accessories

POS - Pullout Shelf

WD - Top of Counter Cabinet

WHA/P/V/WACC - Wood Hoods

F-SHELF - Floating Shelf

Vanity Cabinets

V2418 - Vanity Sink Base

V30D - 1 Door and 2 Drawer Vanity Sink Base

V482DD - 2 Door and 4 Drawer Vanity Sink Base

VDB15 - Vanity Drawer Base

VBD30 - Bottom Drawer Vanity

VDD30 - Double Drawer Vanity

VOB24 - Open Bottom Vanity

MC1830 - Medicine Cabinet

DD30 - Desk Drawer

Collections and Styles

Luxor Collection

The Luxor Collection is our partial overlay cabinet constructed from all plywood. All drawer boxes are made with dovetail construction and come with a slab drawer front and soft-close undermount glides. Five panel drawer front is available in the White finish only.

***Please note, cabinet door and box dimensions may vary by 1/8″**

Price Code: L
Luxor

Price Code: P
Luxor 5 Panel

Luxor

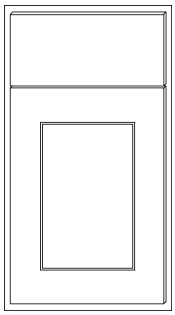

L02 - Smoky Grey (Birch/Hardwood door)
L03 - Misty Grey (MDF door)
L10 - White (MDF door)
L11 - Espresso (Birch/Hardwood door)

A partial overlay, ½″ reveal, 2 ½″ wide shaker style door with a flat center panel, Mortise and Tenon construction, and a slab drawer front.

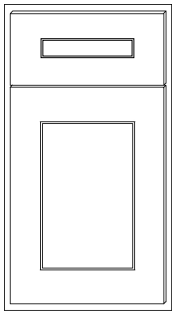

***L10 - White can be upgraded to feature a five panel drawer front**

Partial Overlay - ½″ reveal

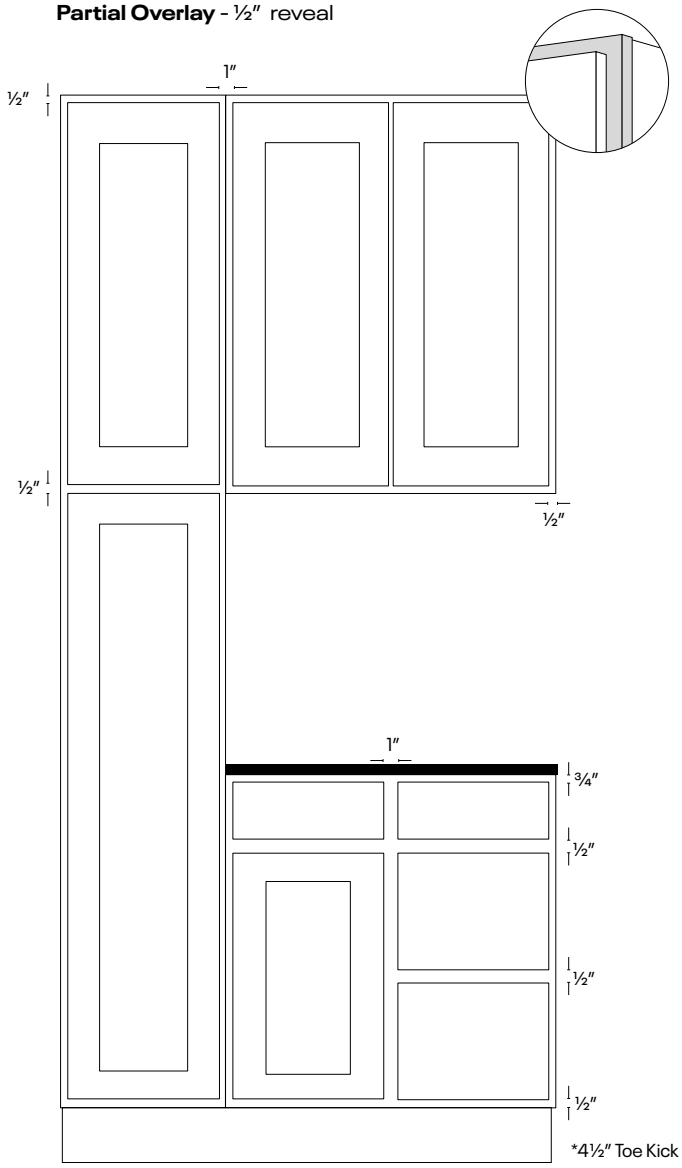

Country Collection

The Country series is our standard overlay cabinet constructed from all plywood. The wall and base cabinets are equipped with 3/4″ plywood adjustable shelves and adjustable hinges. Drawer boxes are made with plywood and have side mount glides.

Price Code: R
Oak

Country Oak

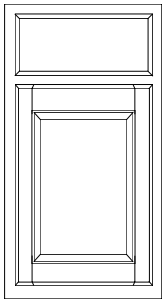

C4 - Oak

A standard overlay, 1″ reveal, , 5 piece solid wood with a raised MDF veneer center panel Mortise and Tenon construction, slab drawer front. Solid wood in a Honey finish.

Standard Overlay - 1″ reveal

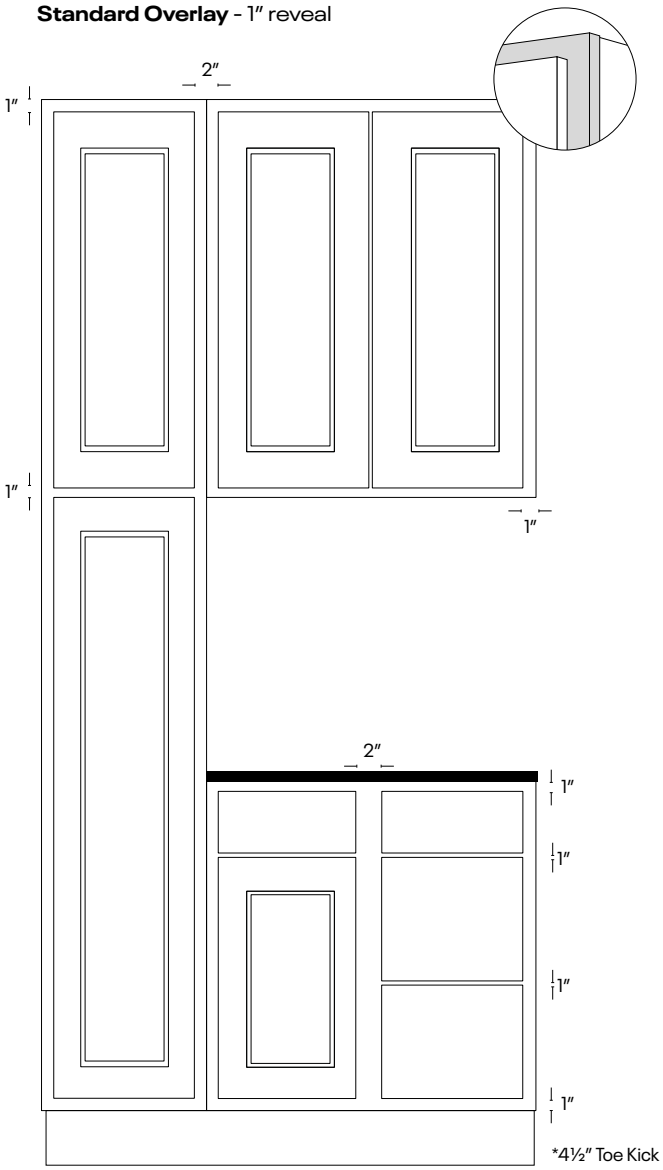

Concord Collection

The Concord series is our full-overlay all plywood cabinet, which comes with full 1/2″ back panels, complete with solid wood dovetail drawer box and a 5-piece drawer front, enhanced by a soft-close feature and full extension under-mount glides to create a smooth glide. The cabinetry is equipped with 3/4″ adjustable shelves and adjustable soft close hinges. Natural wood finished interiors allow for practicality and ease of maintenance.

Price Code: A
Elegant White
Elegant Dove
Elegant Ocean
Elegant Smoky Grey

Price Code: B
Fashion
Elegant Stone

Price Code: C
Park Avenue
Richmond

Elegant

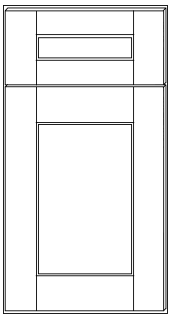

EB02 - Smoky Grey
EB10 - White
EB22 - Dove
EB23 - Stone
EB27 - Ocean

A full overlay 5 piece solid wood, with solid MDF veneer flat center panel. Mortise and Tenon construction.

Fashion

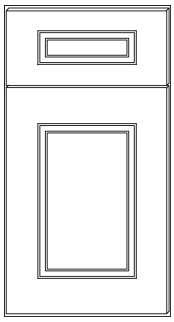

FB10 - White
FB27 - Ocean

A full overlay 5 piece solid wood, with solid MDF veneer flat center panel. Mortise and Tenon construction.

Park Avenue

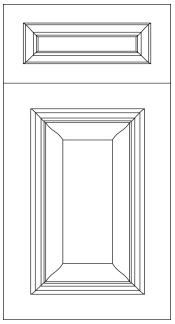

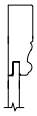

PB10 - White
PB27 - Ocean

A full overlay 5 piece solid wood, raised panel MDF veneer center. Mitered construction.

Richmond

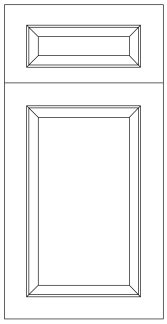

RB10 - White
RB23 - Stone

A full overlay 5 piece solid wood, with solid MDF veneer flat center panel. Mitered construction.

Full Overlay - ¼″ reveal

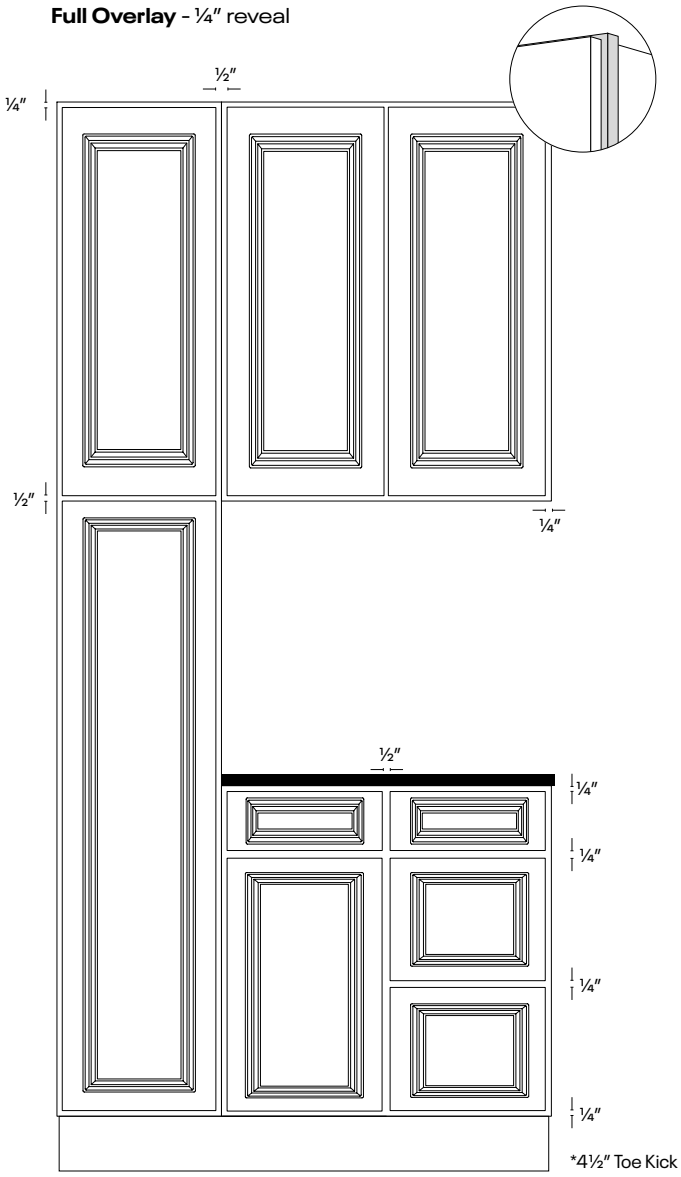

Classic Collection

The Classic series is composed of a frame-less box construction, with metal drawers that are outfitted with full extension, under-mount drawer glides, as well as the soft-close feature. The adjustable soft close hinges, ¾″ adjustable full-depth plywood shelves, and dowel and glue-clamped assembly construction create a solid, durable framework for your cabinetry.

Price Code: E
Matrix

Price Code: F
Milano

Price Code: H/I
Alvic - Luxe
Alvic- Zenit

Matrix

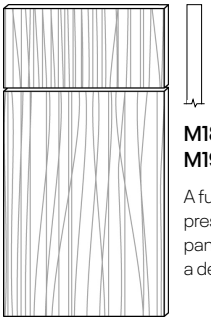

M18 - Silver
M19 - Greystone

A full overlay low pressure laminate flat panel MDF door, with a deep textures finish.

Milano

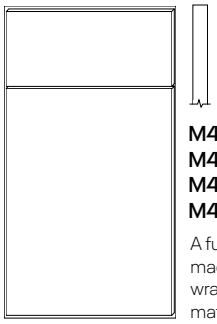

M40 - Polar White
M41 - Fossil Grey
M42 - Seaside
M43 - Sand

A full overlay slab door made from a MDF core, wrapped in PET with a matching edgeband.

Alvic

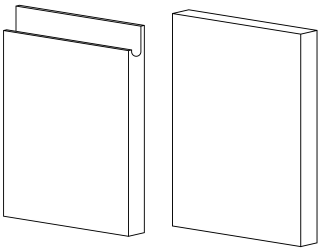

Finger-Pull
22mm / ⅞″

Slab
18mm / ¾″

***Full color list available on website**

Alvic doors come with a color matching soft postforming edge band. For better ergonomics, the finger pull doors are made 22mm thick and the slab doors are 18mm thick.

*Alvic Doors come standard equipped with Blum hinges

Frameless - ⅛″ reveal

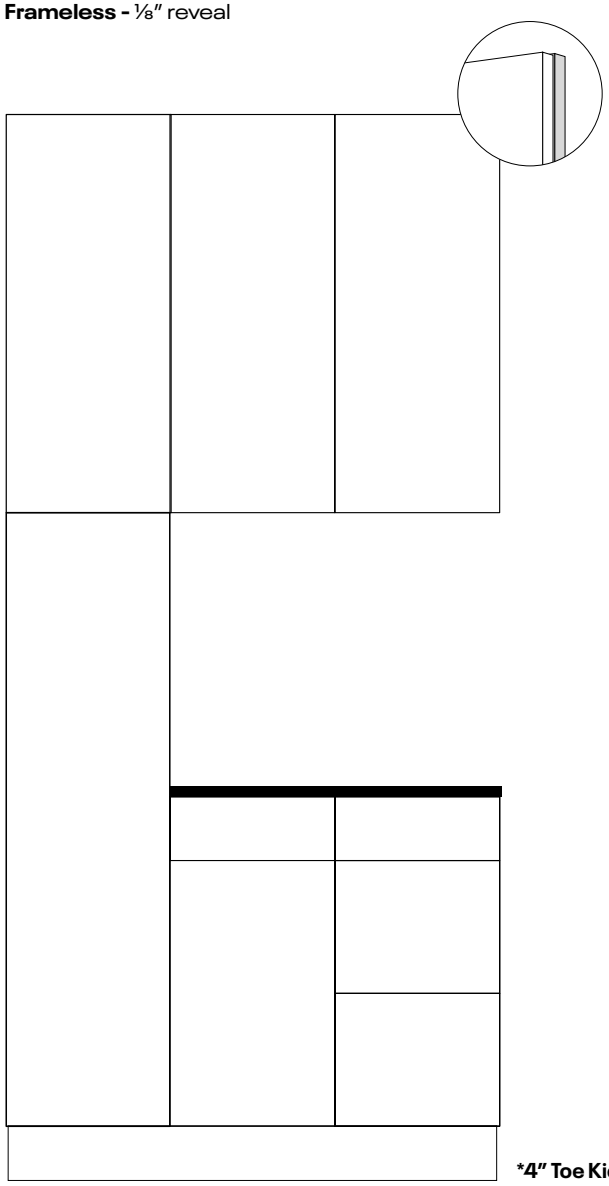

***4″ Toe Kick**

Displays and Samples

Displays & Samples

Item Number	Luxor/Country	Classic	Concord
SD11X14	18	18	18
SBF13.5	25	25	25

• Net Price

Door Samples

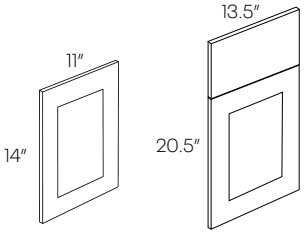

SD SBF

Showroom Displays

B12M (Mini Base)*	94.5	129.5	132
DISP-CENTER	-	-	-
DISP-STAND**	222	222	222
DISP-MLDG	47	47	47
DISP-PFCHIPS	-	-	-
DISP-MERCH	330	330	330

* Only available in Luxor & Elegant White
**List Price
• Net Price
• New DISP-CENTER coming soon

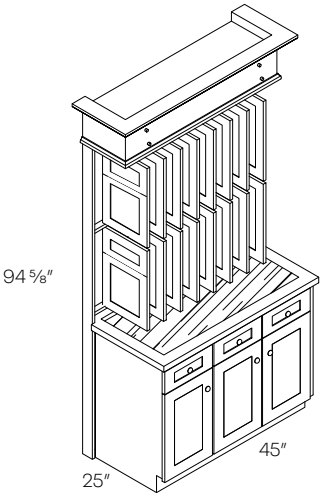

DISP-CENTER

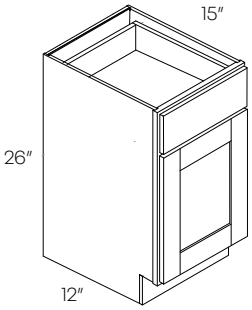

B12M

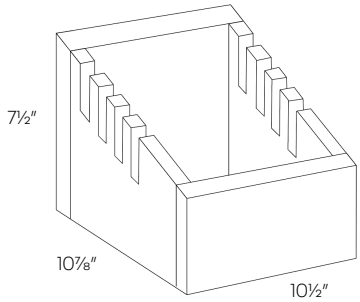

DISP-STAND

DISP-MERCH

Item Number	Luxor/Country	Classic	Concord
Literature			
DISP-SPEC (Spec Book)	0	0	0
DISP-CATALOG	0	0	0
DISP-VAN (Vanity)	0	0	0
DISP-TRIFOLD	0	0	0
DISP-ALVIC	0	0	0
DISP-CNTP	0	0	0

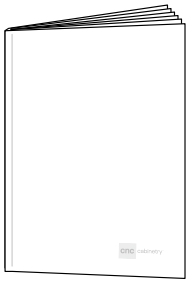

Swatches			
DISP-COLORBLOCKS	47	47	47
Granite Sample Box (all colors)	50	50	0
ALL - CS 8x8 (Luxe)	N/A	16	N/A
ALS - CS 8x8 (Syncron)	N/A	16	N/A
ALZ - CS 8x8 (Zenit)	N/A	16	N/A
AL - SET-19 (Top 19 colors)	N/A	131	N/A
AL-SET (Full set of 91 colors)	N/A	420	N/A
AL-CSB (Sample Book)	N/A	126	N/A

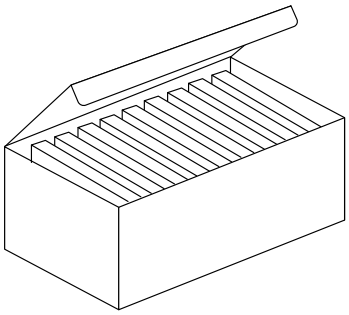

• Net Price (Price includes shipping)

Cabinet & Door Information

Luxor Collection

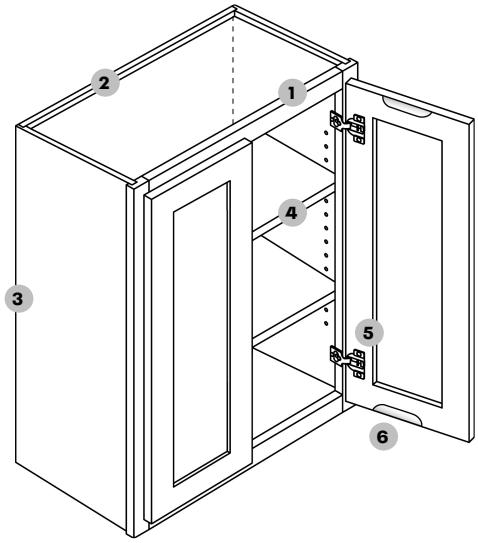

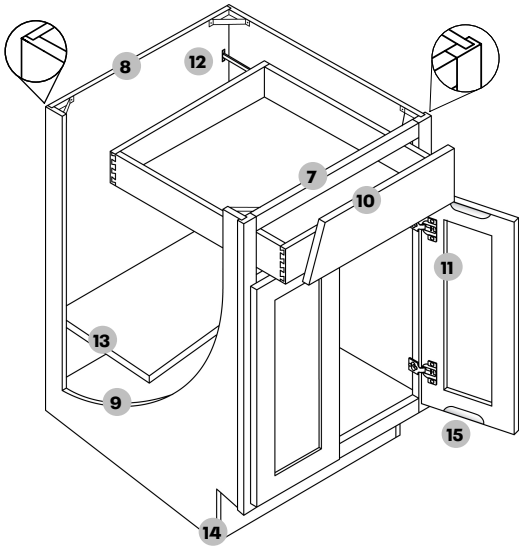

1. **Frame** — 3/4″ thick Solid Wood, 1½″ wide, kiln-dried solid hardwood. Assembled with glue and nails, under clamp pressure, which ensures squareness.
2. **Back panel** — Made of 1/2″ plywood. Rabbeted and stapled into cabinet sides, screwed into top and bottom.
3. **End panel** — Top and bottom 1/2″ plywood substrate, with light maple woodgrain laminate interior. Matching exterior.
4. **Shelves** — 3/4″ thick, plywood; fully adjustable.
5. **Hinges —** Heavy duty steel concealed hinge, adjustable with soft-close mechanism.

   *36″ and 42″ Wall cabinets will have 3 hinges
6. **Doors —** Finger pull groove for easy access
7. **Base frame** — 3/4″ thick Solid Wood, 1½″ wide, kiln-dried solid hardwood. Assembled with glue and nails, under clamp pressure, which ensures squareness.
8. **Back panel** — 1/2″ plywood material. Rabbeted and stapled into cabinet sides, screwed into top and bottom.
9. **End panel** — 1/2″ plywood substrate, with light maple woodgrain laminate interior. Matching exterior.
10. **Drawers** — 5/8 ″ solid wood Dovetail sides 3/8″ thick bottom; Finger pull groove for easy access
11. **Hinges —** Heavy duty steel concealed hinge, adjustable with soft-close mechanism.
12. **Glides** — 3/4 extension, high quality soft-close under mounted glides.
13. **Shelves** — 3/4″ thick, plywood; fully adjustable. (10″ deep)
14. **Toe kick** — 4½″ Toe kick with 2½″ ″ inset on all standard base and vanity cabinets.
15. **Doors —** Finger pull groove for easy access

Luxor

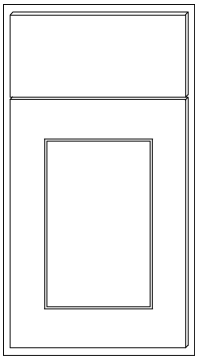

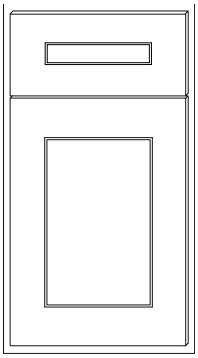

*5 Panel Drawer front

Finish	Price Code
L02 - Smoky Grey (stain) (Birch/Hardwood door)	L
L03-Misty Grey (paint) (MDF door)	L
L10-White (paint) (MDF door)	L
L11-Espresso (stain) (Birch/Hardwood door)	L
L10 - White (5 Panel) (MDF door)	P

A partial ½″ reveal,2 ½″ wide shaker style MDF door with a flat center panel, Mortise and Tenon construction, slab drawer front.

*Luxor Cabinets cannot be extended
*Matching finished interiors are not available in the Luxor Collection
*Glass doors are available for all wall cabinets
*5 Panel drawer is available in L10 only

Specifications and Prices

Luxor Collection

12″ - 15″ High Wall Cabinet

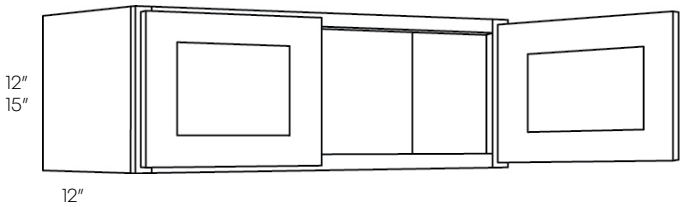

Item Number	L
3012	338
3312	351
3612	381
2415	334
3015	344
3315	359
3615	381

• No Shelf

18″ High Wall Cabinet

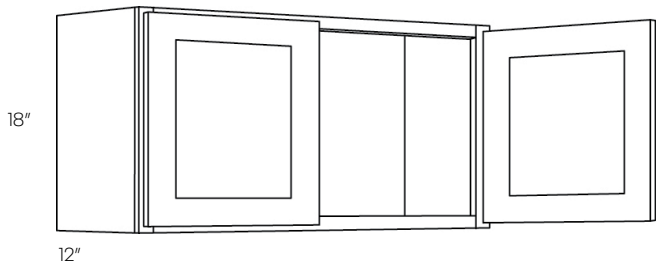

2118 (1 Door)	317
2418	334
2718	336
3018	349
3318	378
3618	433
3918	485

• No Shelf

24″ High Wall Cabinet

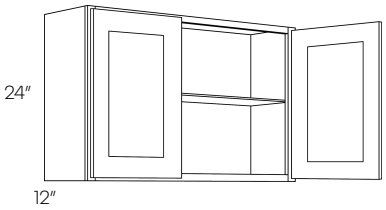

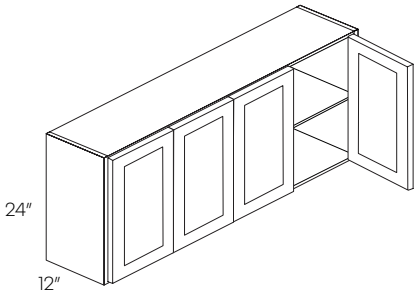

4824

1824 (1 Door)	356
2424	458
2724	470
3024	480
3324	511
3624	549
3924	600
4224	653
4824 (4 Door)	729

24″ Deep Wall Cabinet

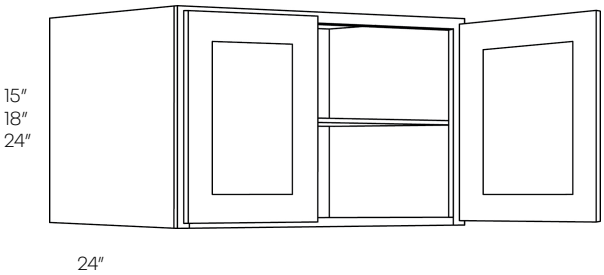

Item Number	L
3015X24	462
3018X24	514
3024X24	641
3318X24	567
3615X24	514
3618X24	579
3624X24	741
3924x24	830

30″ High 1 Door Wall Cabinet

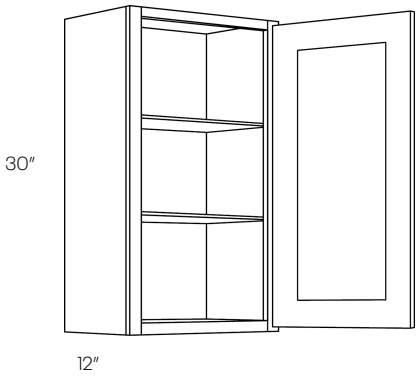

930	272
1230	303
1530	327
1830	368
2130	440

30″ High 2 Door Wall Cabinet

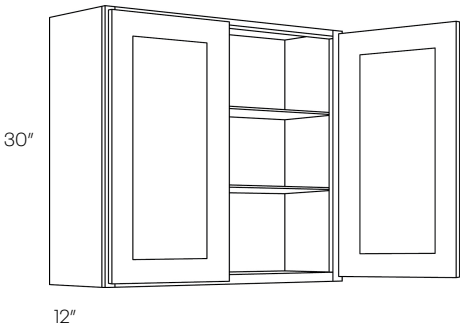

2430	469
2730	516
3030	529
3330	575
3630	612
3930	660
4230	702

30″ High 4 Door Wall Cabinet

Item Number	L
4830	794
5430	888

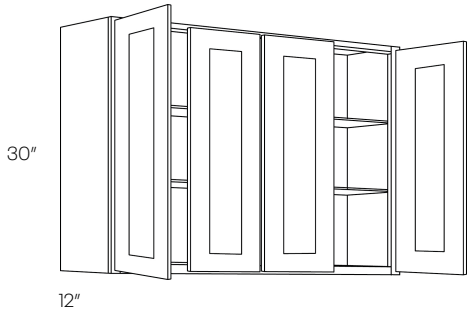

30″ High Open Wall Cabinet

6030-O	907

• Opening Natural Interior Finish

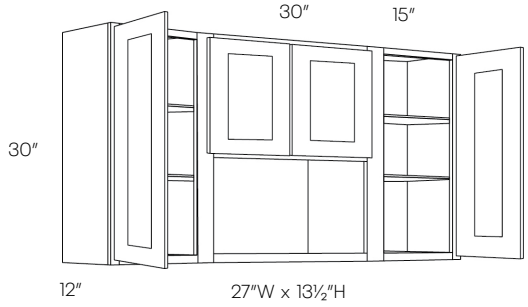

30″ High Blind Wall Cabinet

BLW27/3030	667
BLW36/3930	797
BLW39/4230	871
BLW42/4530	956

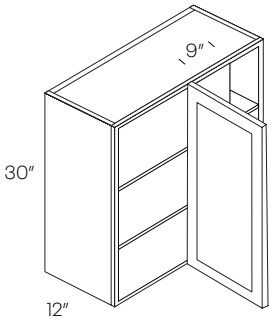

BLW27/BLW36

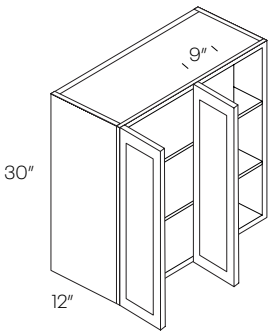

BLW39/BLW42

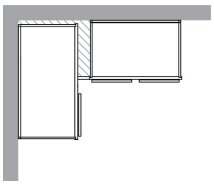

• Reversible Left or Right
• Can be installed at actual size

Cabinet	Min. Pull	Max. Pull	Actual Size	Door(s)	Door Opening
BLW27/3030	33″	30″	27″	1230	9″ X 27″
BLW36/3930	36″	39″	36″	2130	18″ X 27″
BLW39/4230	39″	42″	39″	2430	21″ X 27″
BLW42/4530	42″	45″	42″	2730	24″ X 27″

30″ High Diagonal Corner Wall Cabinet

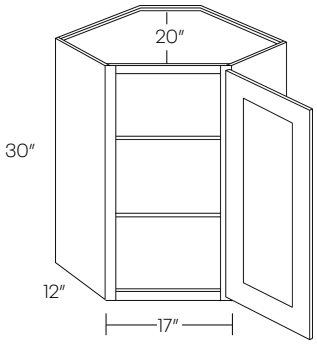

Item Number	L
CW2430	683

• Requires 24″x24″ wall space

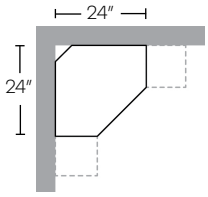

36″ High 1 Door Wall Cabinet

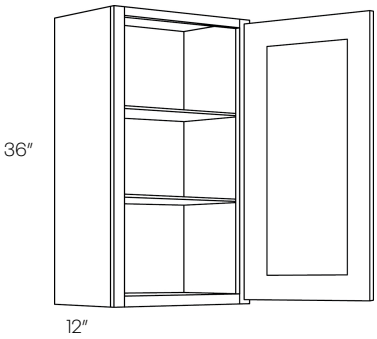

936	310
1236	344
1536	371
1836	418
2136	499

36″ High 2 Door Wall Cabinet

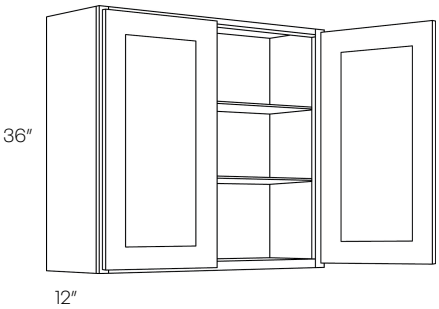

2436	535
2736	586
3036	604
3336	657
3636	698
4236	797

Item Number	L

36″ High Blind Wall Cabinet

BLW27/3036	759
BLW36/3936	911
BLW39/4236	995

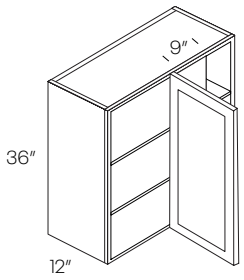

BLW27/BLW36

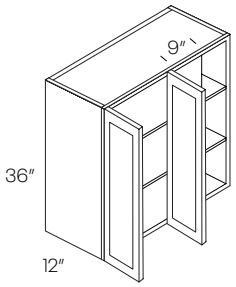

BLW39

- Reversible Left or Right
- Can be installed at actual size

Cabinet	Min. Pull	Max. Pull	Actual Size	Door(s)	Door Opening
BLW27/3036	36″	30″	27″	1236	9″ X 33″
BLW36/3936	39″	39″	36″	2136	18″ X 33″
BLW39/4236	42″	42″	39″	2436	21″ X 33″

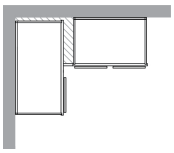

36″ High Diagonal Corner Wall Cabinet

CW2436	780

- Requires 24″x24″ wall space

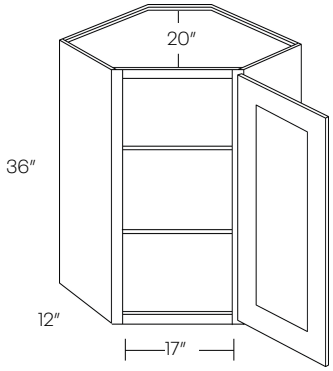

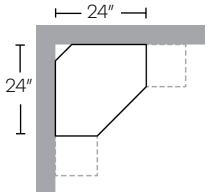

42″ High 1 Door Wall Cabinet

942	366
1242	396
1542	438
1842	487
2142	580

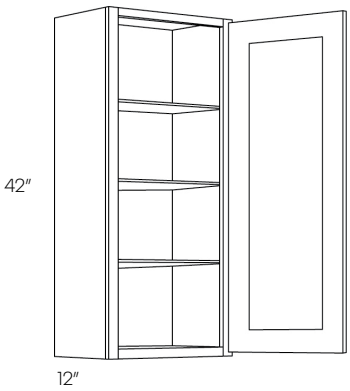

42″ High 2 Door Wall Cabinet

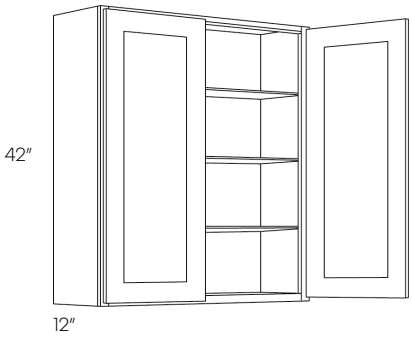

Item Number	L
2442	622
2742	685
3042	710
3342	763
3642	810
4242	940

42″ High Blind Wall Cabinet

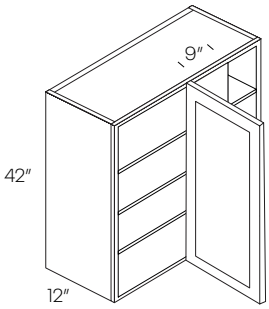

BLW27/BLW36

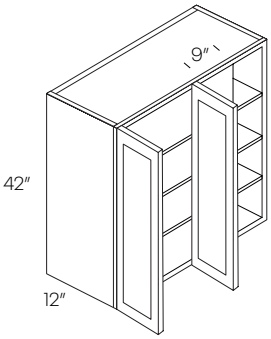

BLW39

BLW27/3042	861
BLW36/3942	1035
BLW39/4242	1132

- Reversible Left or Right
- Can be installed at actual size

Cabinet	Min. Pull	Max. Pull	Actual Size	Door(s)	Door Opening
BLW27/3042	36″	30″	27″	1242	9″ X 39″
BLW36/3942	39″	39″	36″	2142	18″ X 39″
BLW39/4242	42″	42″	39″	2442	21″ X 39″

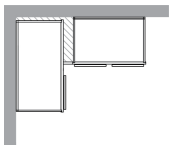

42″ High Diagonal Corner Wall Cabinet

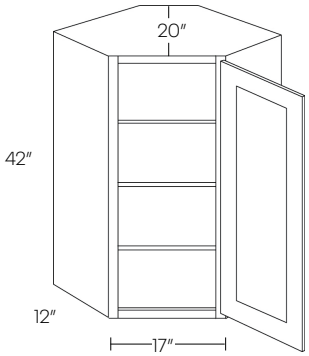

CW2442	888

- Requires 24″x24″ wall space

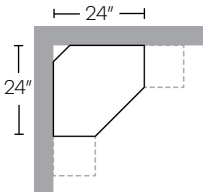

Single Door Wall End Cabinet

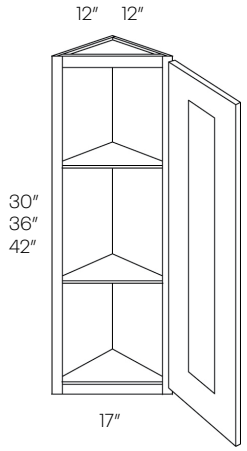

Item Number	L
WEC1230	319
WEC1236	363
WEC1242	404

• 42″ has 3 shelves

Microwave Cabinet

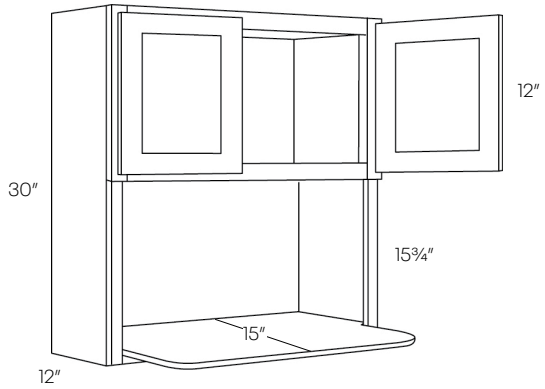

MW3030	656

• Opening 27″ x 15¾″
• Shelf 15″ deep
• Shelf ships loose
• Depth of the shelf may be cut-down
• Finished Interior mid-2023

Microwave Cabinet

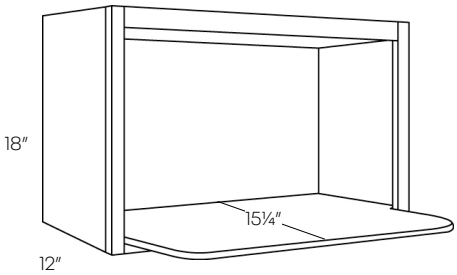

MW3018	460

• Opening 27″ X 14¼″
• Shelf ships loose
• Depth of the shelf may be cut-down
• Finished Interior mid-2023

1 Door Base Cabinet

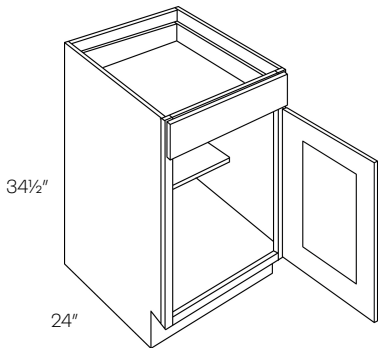

Item Number	L	P
B9	396	417
B9-FH	396	417
B12	456	479
B15	477	501
B18	501	527
B21	571	599

• 10″ Deep Shelf

1 Drawer 2 Door Base Cabinet

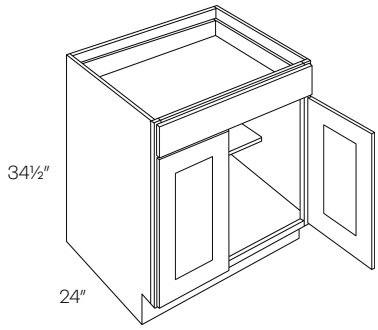

Item Number	L	P
B24	639	671
B27	706	742

• 10″ Deep Shelf

2 Drawer 2 Door Base Cabinet

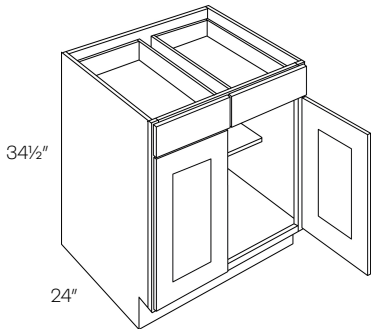

Item Number	L	P
B30	769	846
B33	821	903
B36	861	949
B39	916	1008
B42	965	1062

• 10″ Deep Shelf

2 Drawer 4 Door Base Cabinet

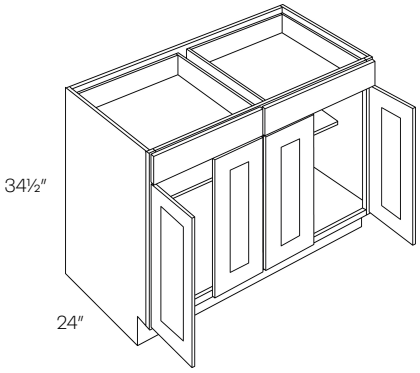

Item Number	L	P
B48	1070	1178

• 10″ Deep Shelf

Blind Base Cabinet

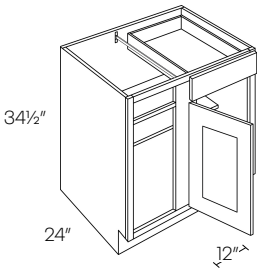

BLB36/39	814	855
BLB39/42	840	882
BLB42/45	898	942
BLB45/48	961	1010
BLB48/51	1035	1087

• Reversible Left or Right
• Must be pulled to the minimum position
* Left blind shown

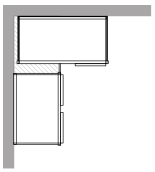

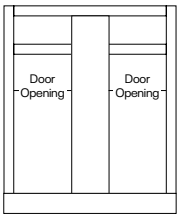

Cabinet	Min. Pull	Max. Pull	Actual Size	Door	Door Opening
BLB36/39	36″	39″	27″	B9	6″
BLB39/42	39″	42″	33″	B12	9″
BLB42/45	42″	45″	39″	B15	12″
BLB45/48	45″	48″	45″	B18	15″
BLB48/51	48″	51″	48″	B39	17″

3 Drawer Base Cabinet

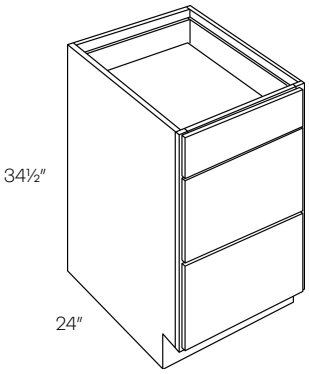

Item Number	L	P
DB12	705	810
DB15	738	850
DB18	761	876
DB21	790	908
DB24	817	940
DB30	893	1027
DB36	965	1110

Diagonal Corner Sink Front

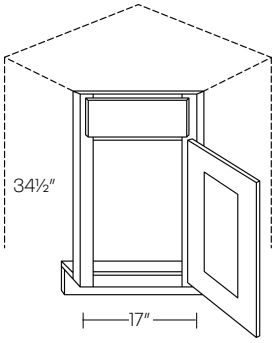

CSF36*	327	361
CSFFL36 (Floor)	153	153

*Requires 36" x 36" wall space.
*Requires Floor (sold separately)

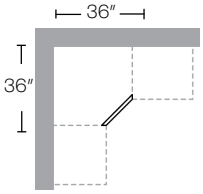

Diagonal Corner Sink Base Cabinet

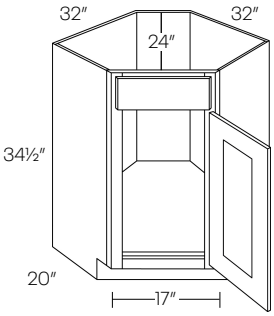

CSB36	1234	1297

• Requires 36" x 36" wall space

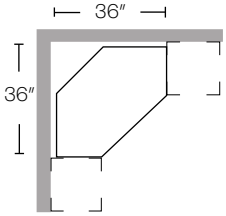

Lazy Susan Corner Base Cabinet

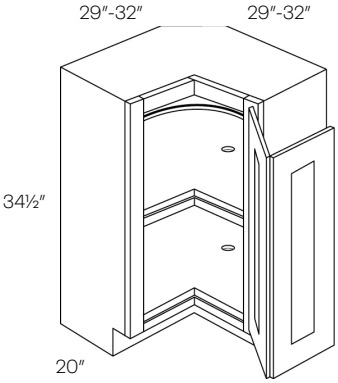

Item Number	L	P
CAR33	1322	1322
CAR36	1322	1322

• Requires 33" x 33" / 36" x36" wall space
• Pie cut for 33" is 9" and for 36" i s 12"
• Wooden Lazy Susan

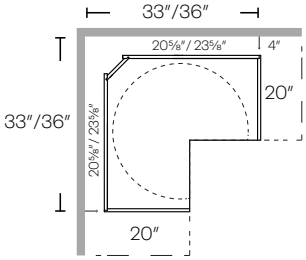

Lazy Susan

LS36	1322	1322

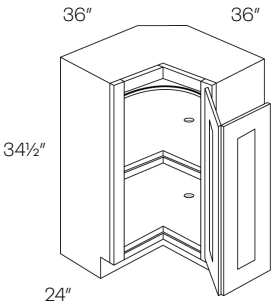

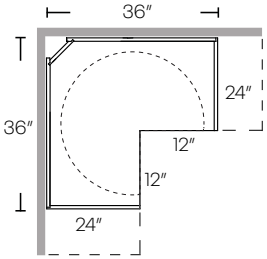

1 Drawer Front 1 Door Sink Base

SB21DL	571	599
SB21DR	571	599

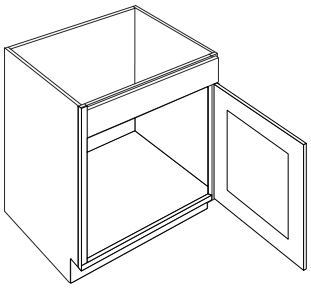

1 Drawer Front 2 Door Sink Base

Item Number	L	P
SB24	602	634
SB27	647	681

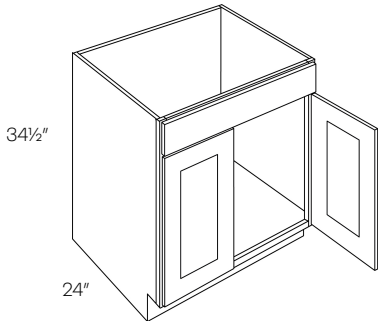

2 Drawer 4 Door Sink Base Cabinet

Item Number	L	P
SB48	876	964

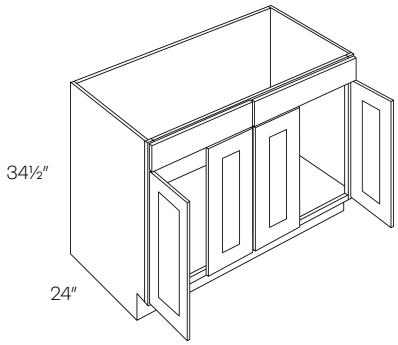

2 Drawer Front 2 Door Sink Base

SB30	685	754
SB33	726	801
SB36	744	818
SB39	762	839
SB42	779	856

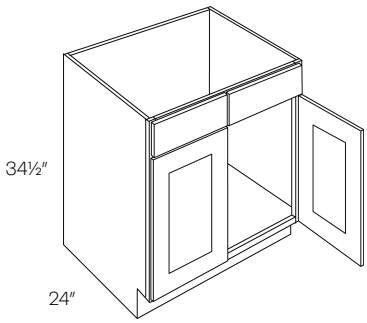

Combination Sink Base Cabinet

SB54	977	1075
SB60	1064	1171

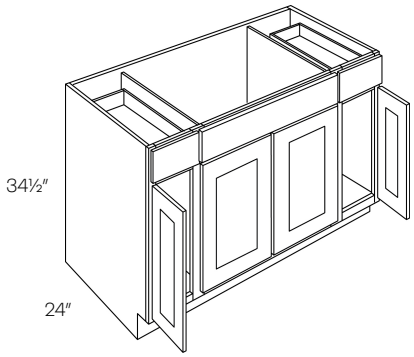

	Door	Sink	Door
SB54	12″	30″	12″
SB60	15″	30″	15″

Double Door Farm Sink Base Cabinet

SB36 - FS	685	685

- Max trimmable 33″ X 10″
- Trimming to be done in field
- Has a fixed platform

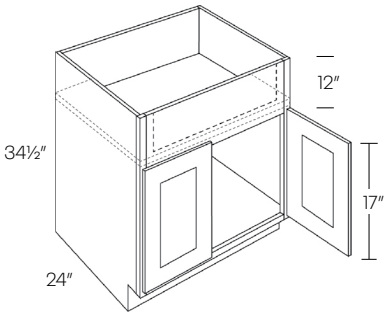

Waste Basket Cabinet

BWBK15 (1-B)	915	961
BWBK18 (2-B)	1013	1063

- Includes 35qt. waste basket (BK18 gets 2) and soft-close glides

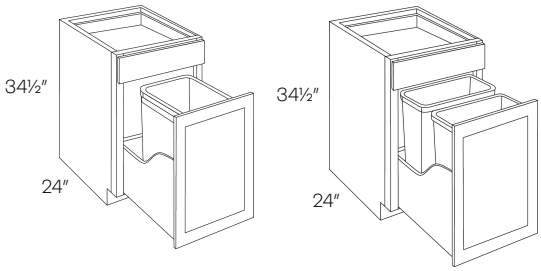

BWBK15

Item Number	L	P

Angle Base End Cabinet

BTC2412	452	452

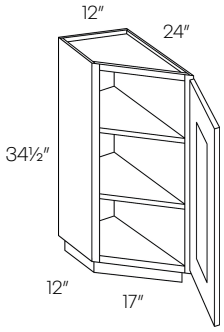

- Reversible
- Loose toe kick
- Hinged on 24″

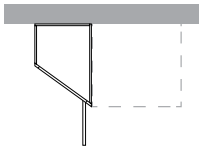

Microwave Base Cabinet

MCB30*	685	720

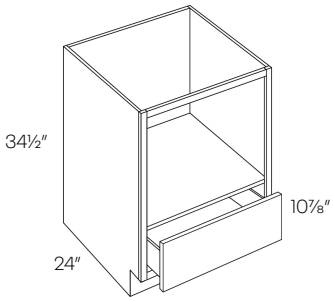

- MC front opening is 27″x16″

*Includes finished Interior coming soon

Base End Cabinet

BEC24	563	563

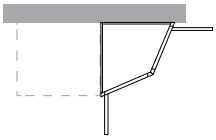

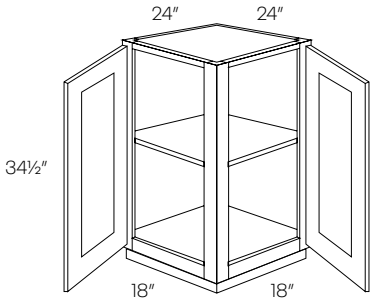

1 Door Base Cabinet

Item Number	L	P
B9-HA	396	417
B12-HA	456	479
B15-HA	477	501
B18-HA	501	527
B21-HA	571	599

•10″ Deep Shelf

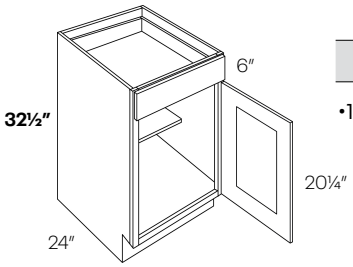

3 Drawer Base Cabinet

Item Number	L	P
DB12-HA	705	810
DB15-HA	738	850
DB18-HA	761	876

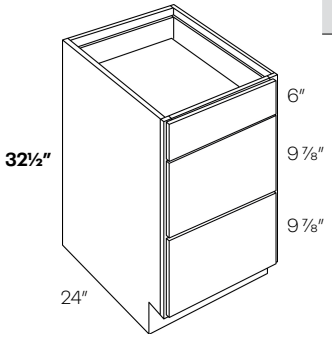

1 Drawer 2 Door Base Cabinet

B24-HA	639	671
B27-HA	706	742

•10″ Deep Shelf

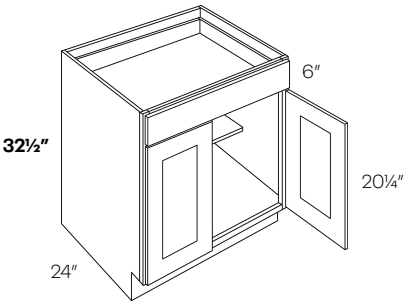

Blind Base Cabinet

BLB36/39-HA	814	855

- Left blind shown
- Reversible Left or Right
- Must be pulled to the minimum position

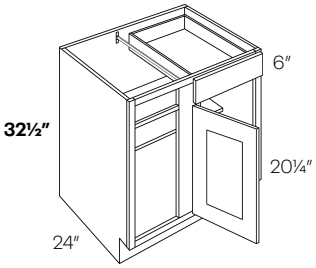

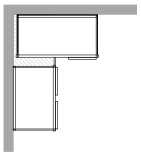

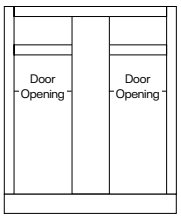

	Min Pull	Max Pull	Actual	Door	Door Opening
BLB36/39	36″	39″	27″	B9	6″

2 Drawer 2 Door Base Cabinet

B30-HA	769	846
B33-HA	821	903
B36-HA	861	949
B39-HA	916	1008

•10″ Deep Shelf

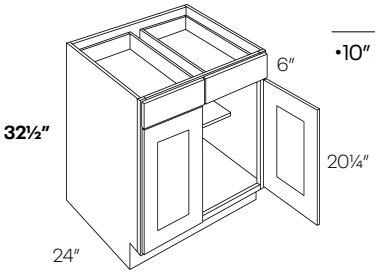

Lazy Susan Corner Base Cabinet

CAR36-HA	1322	1322

- Requires 36″ x 36″ wall space

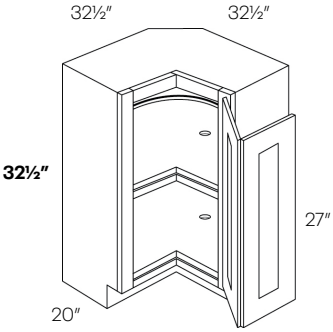

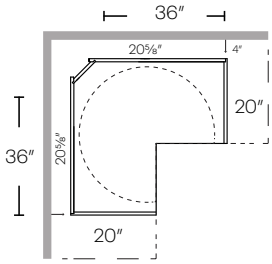

Removable Piece**

Item Number	L	P
33		
36		

*HR=Handicap Removable
• Has full back panel

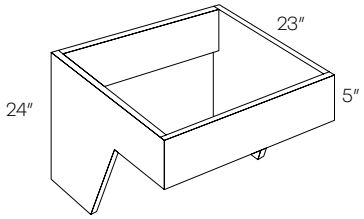

Side profile

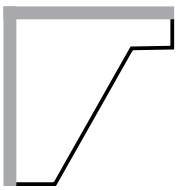

2 Door Vanity Sink Base Cabinet

Item Number	L	P
V24-HA	359	377
V30-HA	516	542
V36-HA	623	655

*HA=Handicap Accessible

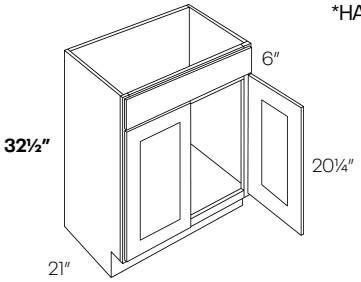

2 Door Removable Sink Base Cabinet

SB33-HR	1081	1189
SB36-HR	1103	1213

*HR=Handicap Removable
• Has full back panel

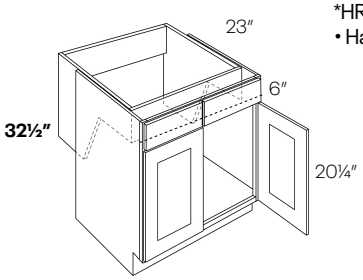

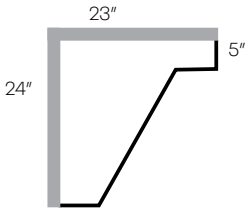

Vanity Drawer Base Cabinet - Handicap Accessible

VDB12-HA	680	782
VDB15-HA	719	827
VDB18-HA	735	846

*HA=Handicap Accessible

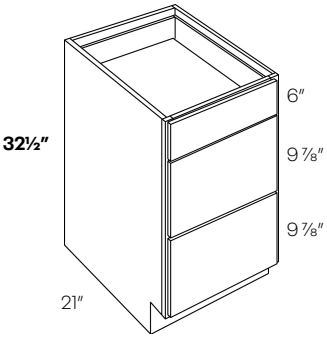

Removable Vanity Base

V30-HR	700	735
V33-HR	876	920
V36-HR	926	973

Has full back panel

*HR=Handicap Removable

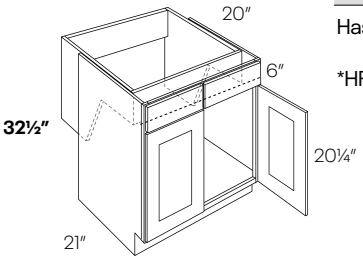

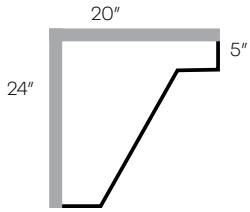

Single Door Utility Cabinet

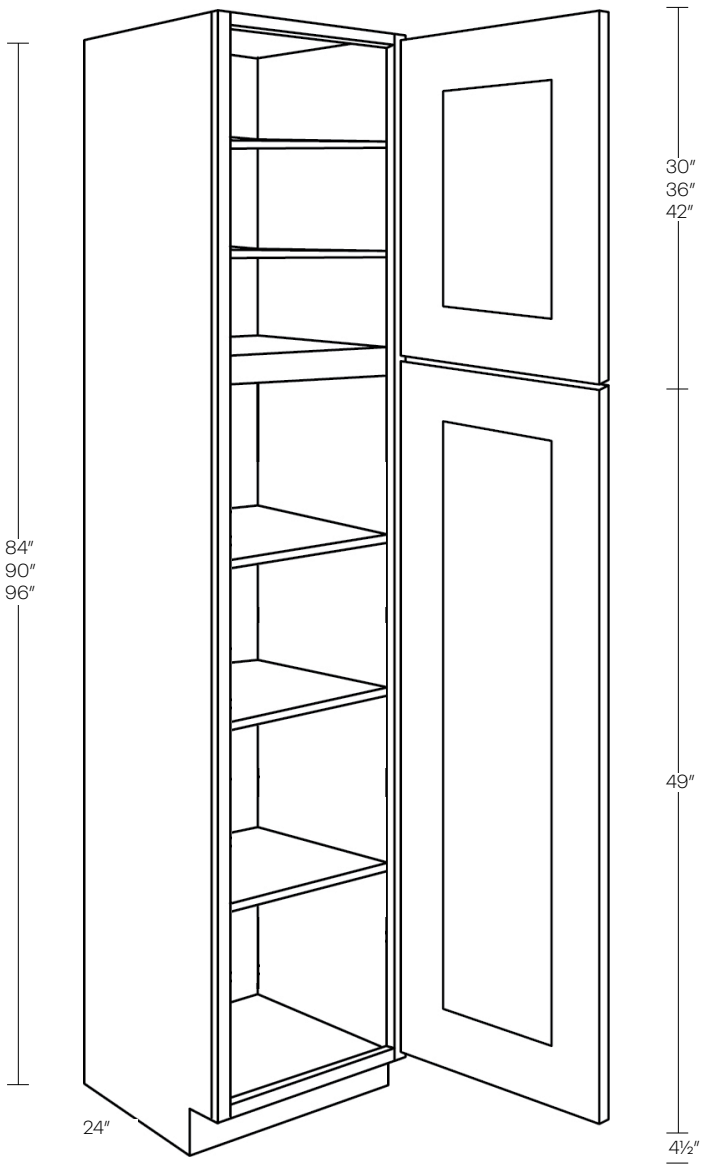

Item Number	L
UC1821X84	1521
UC1824X84	1521
UC1824X90	1734
UC1824X96*	1979

- 3 bottom adjustable shelves
- 84″ and 90″ have 2 upper shelves
- 96″ has 3 upper shelves

Double Door Utility Cabinet

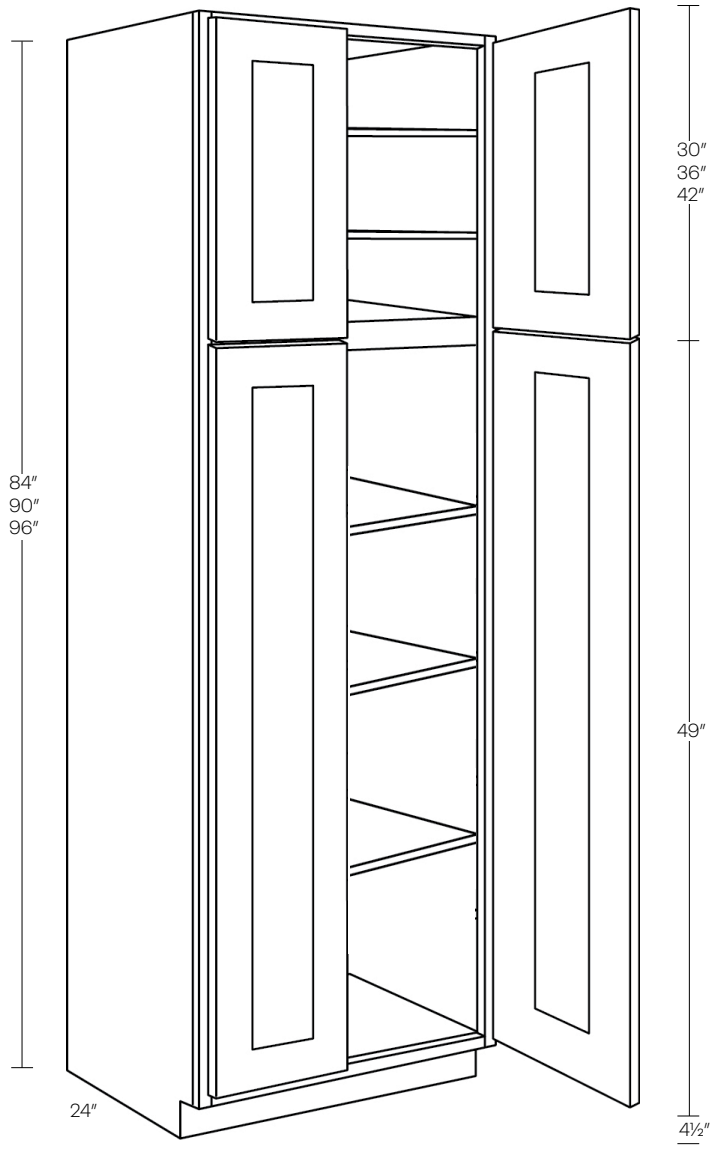

Item Number	L
UC2424X84	1752
UC2424X90	2000
UC2424X96*	2212

- 3 bottom adjustable shelves
- 84″ and 90″ have 2 upper shelves
- 96″ has 3 upper shelves

Double Door Oven Cabinet

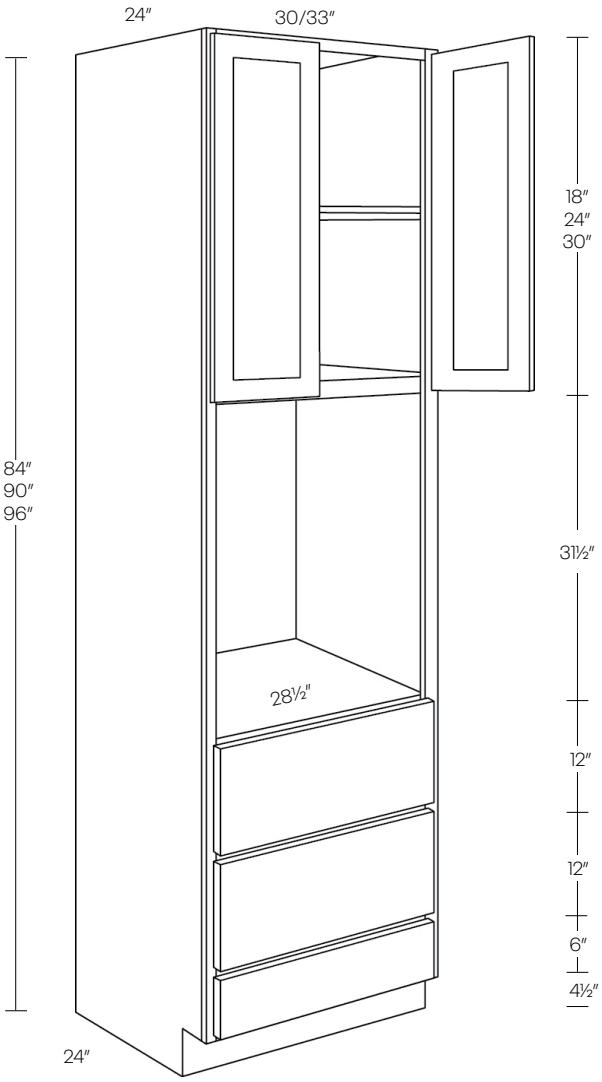

Item Number	L	P
OV3084	1690	1944
OV3090	1942	2234
OV3096*	2198	2528
OV3384	1690	1944
OV3390	1942	2234
OV3396*	2198	2528

* 96″ has 2 upper shelves
• For double ovens, remove drawer floor as needed

Side

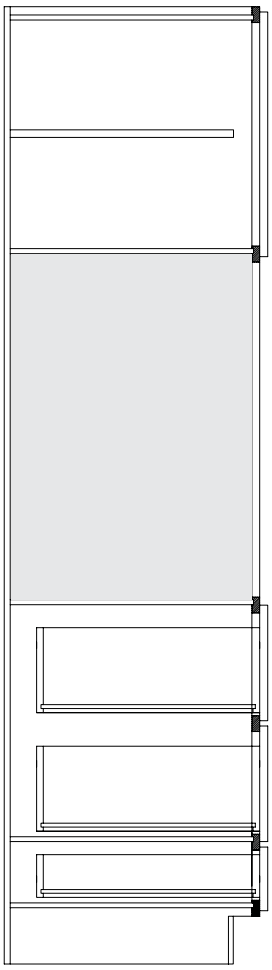

Side - Field Modified
*for double oven, remove fixed shelf and bottom two 12″ drawers in field

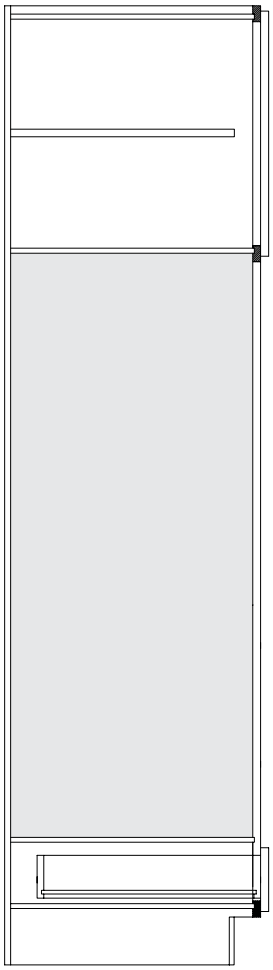

Pull Out Shelf

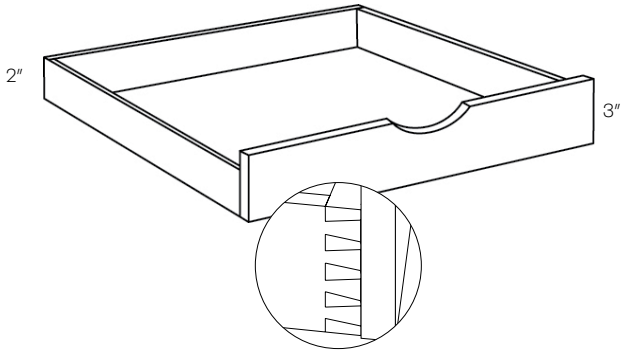

Item Number	L
POS-12	198
POS-15	207
POS-18	228
POS-21	240
POS-24	271
POS-27	282
POS-30	294
POS-33	307
POS-36	329
POS-42	345

- Natural finish
- Ball bearing soft-close glides included
- POS uses dovetail construction

Floating Shelves

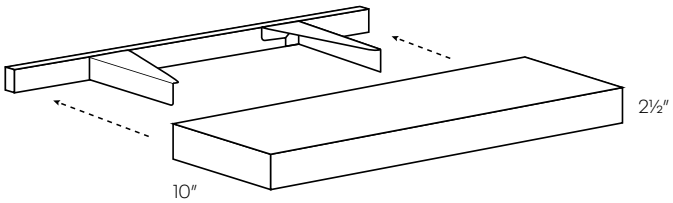

F-SHELF-24	483
F-SHELF-30	576
F-SHELF-36	668
F-SHELF-42	760

•Can be painted/stained to match any available finish

Arched Wood Hood

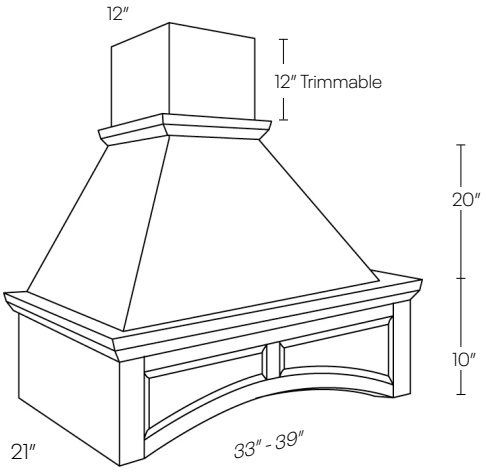

Standard Raised Panel

Item Number	L	P
WHA30/33	4403	4403
WHA36/39	4752	4752

- Inside dimensions all 18″ deep by 27½″ / 33½″
- Liners Included
- Blower not available
- Up to two week extended lead time

30″ Hood Liner

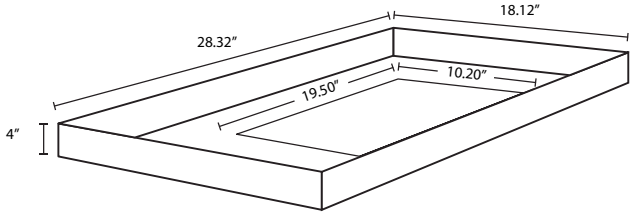

36″ Hood Liner

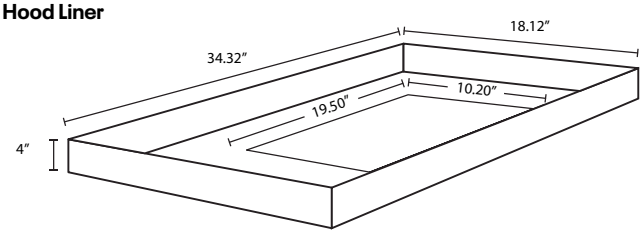

When purchasing your blower unit, check the requirements for your range or cooktop. Verify the blower will fit into the interior dimensions of the hood.

Straight Wood Hood

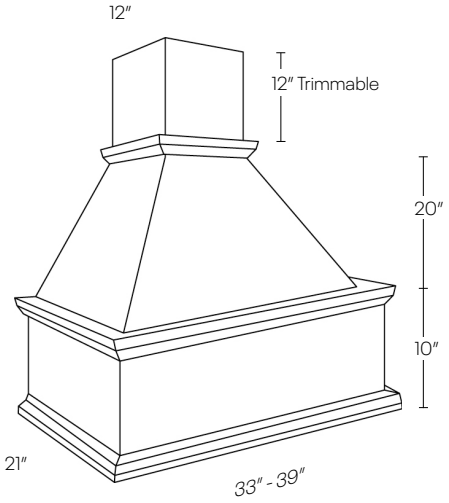

WHP30/33	4403	4403
WHP36/39	4752	4752

- Inside dimensions all 18″ deep by 27½″ / 33½″
- Liners Included
- Blower not available
- Extended lead time
- Up to two week extended lead time

30″ Hood Liner

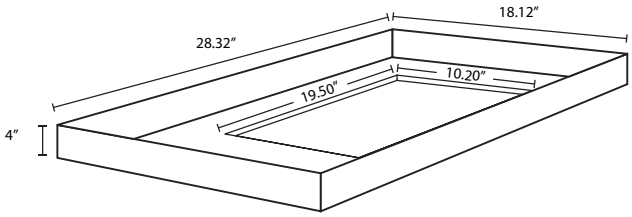

36″ Hood Liner

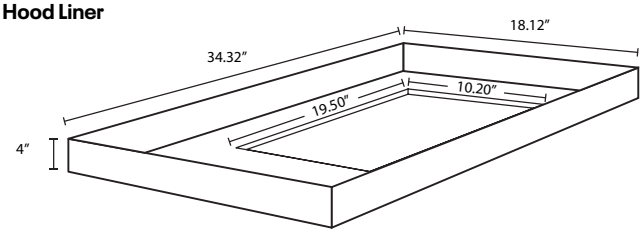

When purchasing your blower unit, check the requirements for your range or cooktop. Verify the blower will fit into the interior dimensions of the hood.

	Item Number	L	P
1 Door Vanity Sink Base Cabinet	**V1816**	307	323

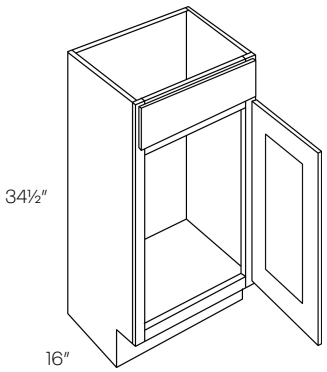

1 Door Vanity Base Cabinet	**VB12**	437	459
	VB15	458	481
	VB18	480	504

• Cabinet has a shelf

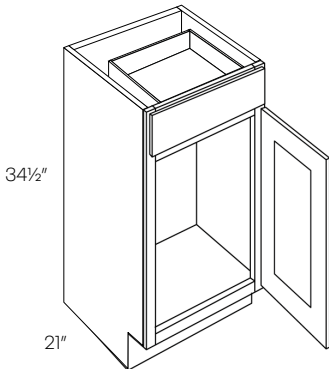

Vanity Drawer Base Cabinet	**VDB12**	699	804
	VDB15	741	853
	VDB18	759	873
	VDB21	772	888
	VDB24	796	916

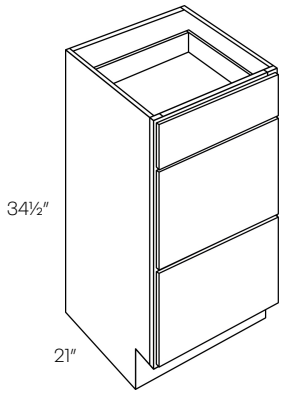

2 Door Vanity Sink Base Cabinet

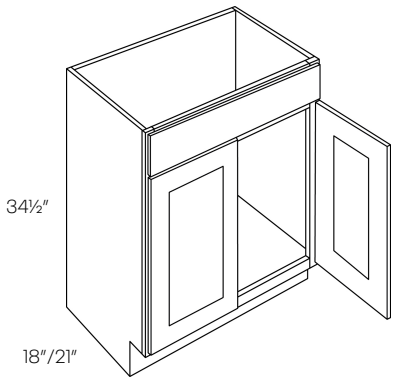

Item Number	L	P
V2418	394	415
V3018	501	527
V24	427	448
V27	472	504
V30	532	560
V33	588	630
V36	643	675
V42	746	784

4 Door Vanity Sink Base Cabinet

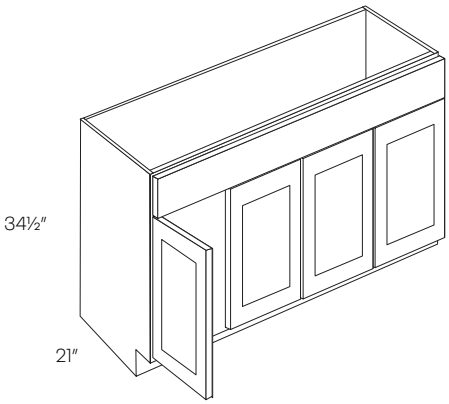

V48	895	940

2 Drawer Vanity Sink Base Cabinet

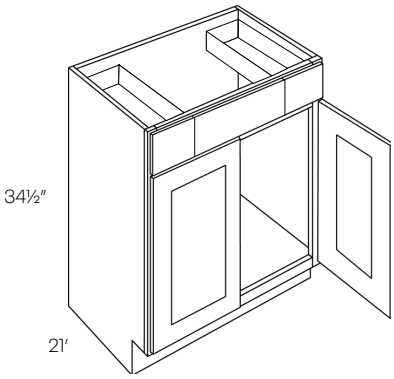

VSB36	784	902
VSB42	840	966

3 Door Vanity Base Cabinet

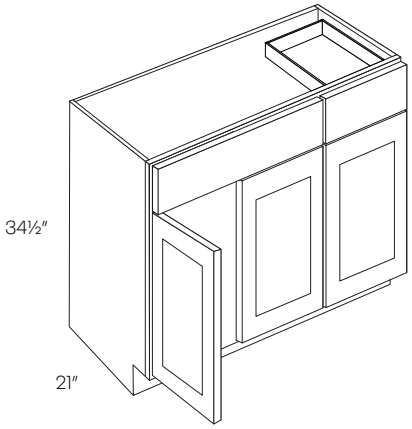

Item Number	L	P
VB36	947	995
VB42	958	1006

• Drawer on right side only

1 Door 2 Drawer Vanity Sink Base Cabinet

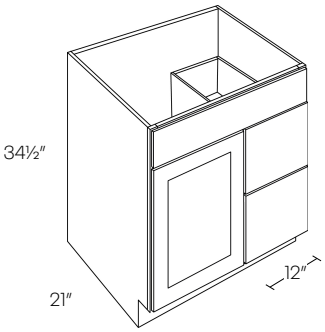

V24DL	640	672
V24DR	640	672
V30DL	884	929
V30DR	884	929

• DR shown in picture

2 Door 2 Drawer Vanity Sink Base Cabinet

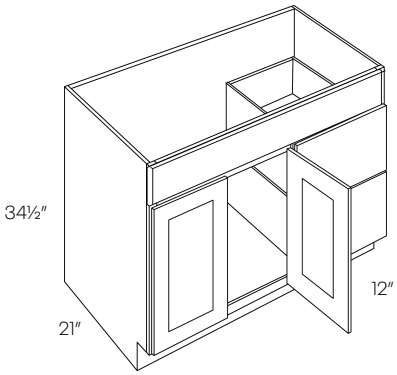

V36DL	952	1000
V36DR	952	1000
V42DL	966	1015
V42DR	966	1015

• DR shown in picture

	Item Number	L	P
2 Door 4 Drawer Vanity Sink Base Cabinet	**V48DD**	1104	1215

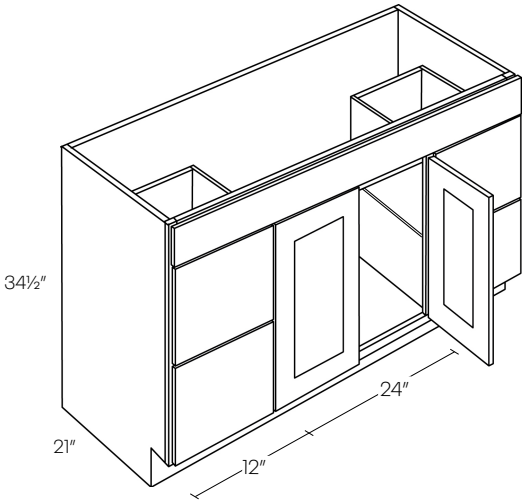

4 Door Vanity Base Cabinet	**VB48**	1092	1147
	VB54	1150	1208
	VB60	1203	1383

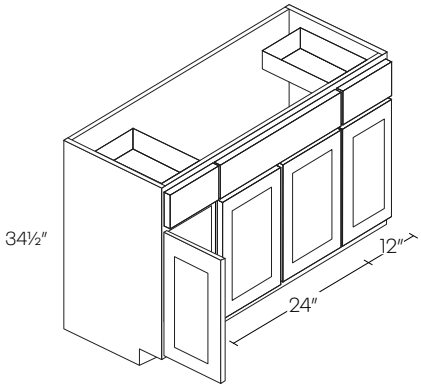

Vanity Drawer Base Cabinet	**V60DD**	1340	1474

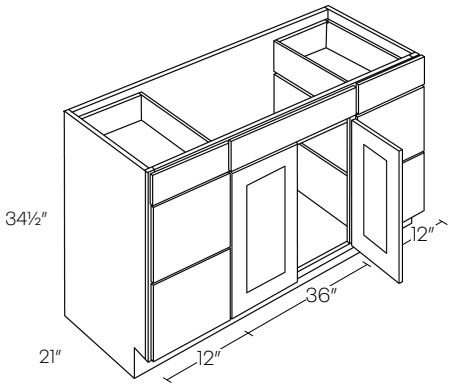

	Item Number	L	P
Vanity Drawer Base Cabinet	**VSD60**	1276	1595

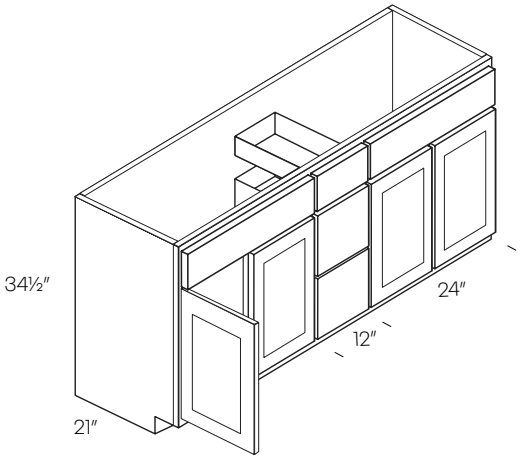

Single Door Medicine Cabinet	**MC1830**	294	294

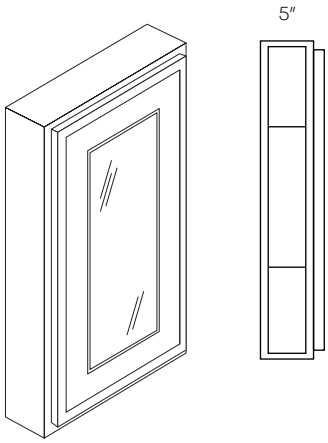

Double Door Medicine Cabinet	**MC2430**	527	527
	MC3030	586	586
	MC3630	661	661

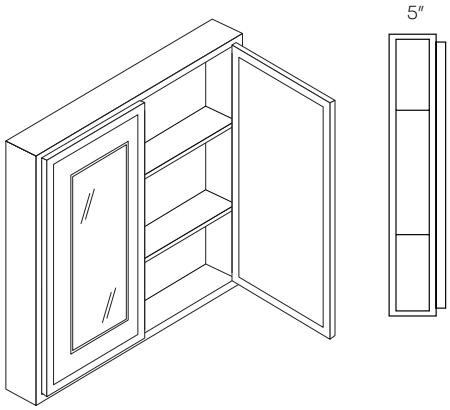

Fillers

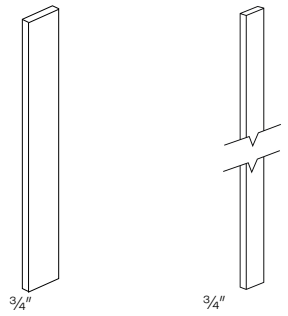

F330/F630/F342/F642 F396/F696

Item Number	L
F330	52
F630	89
F342	68
F642	120
F396	160
F696	265

- Fillers finished on all 4 sides

Base End Panel

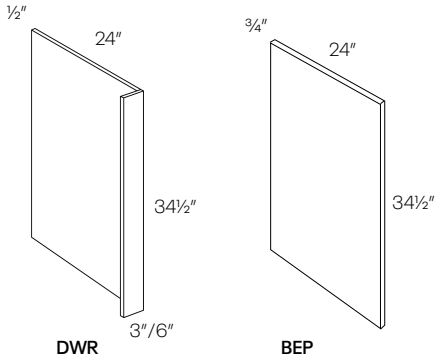

DWR BEP

DWR3	272
DWR6	302
BEP	238

Plywood Panel

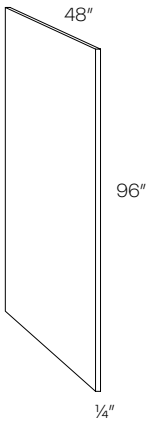

PLY4X8	410

Refrigerator End Panel

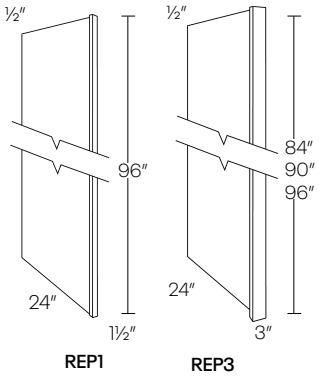

REP1 REP3

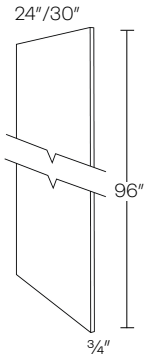

UREP

Item Number	L
REP196	518
REP384	470
REP390	494
REP396	518
UREP24	361
UREP30	480
UREP24-9	406
UREP30-9	540
UREP24-10	457
UREP30-10	608

- Edgebanded on one side
- REP196 is only available in White

Crown Molding

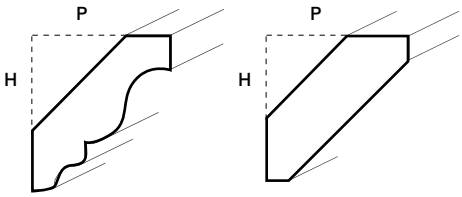

CRM
Height: 2″
Projection: 2″

CRMS
Height: 2″
Projection: 2″

CRM	141
CRMS	141

- 8 feet long

Royal Crown Molding

Item Number	L
RCRM	397
RCRMS	397
RCRMC	397

- 8 feet long

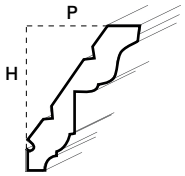

RCRM
Height: 3½″
Projection: 2½″

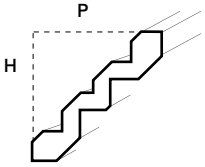

RCRMS
Height: 3⅛″
Projection: 3⅛″

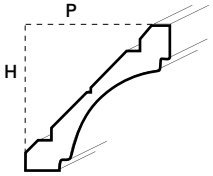

RCRMC
Height: 3⅛″
Projection: 3⅛″

Base Molding

Item Number	L
BSMS	283

- 8 feet long

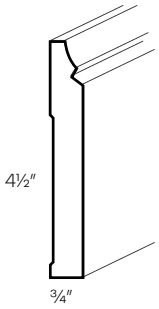

Corbel

CBS6	100
CBS10	139

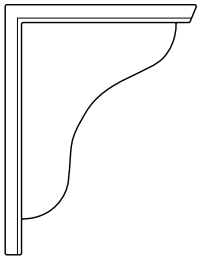

	W	D	H
CBS6	3″	3½″	6½″
CBS10	3″	7½″	10½″

Scribe Molding

SCM	87

- 8 feet long

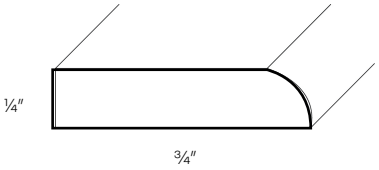

Corner Molding

OCM	107
OCM135	107
ICM	107

- 8 feet long

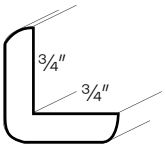

OCM

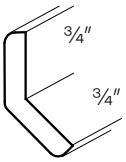

OCM135

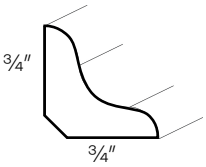

ICM

Column

CLM-B30 (34½″H X 30″D)	451
CLM-30X15 (30″H X 15″D)	228
CLM-36X15 (36″H X 15″D)	255
CLM-42X15 (42″H X 15″D)	283

- Depth is Trimmable
- Finished 3 sides

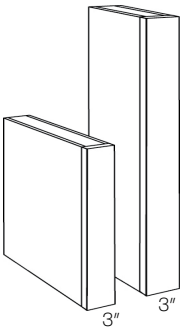

Toe Kick

Item Number	L
TKS	89

- 8 feet long

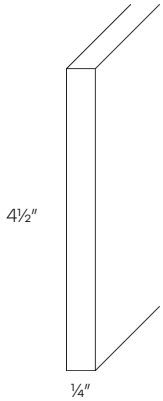

Shoe Molding

Item Number	L
SHM	119

- 8 feet long

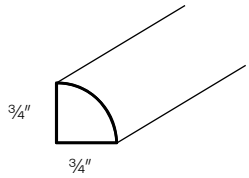

Finished Skin

Item Number	L
FS30	107
FS42	149
FS9624	283
FSB	139
FSV	138

- ¼″ Thick

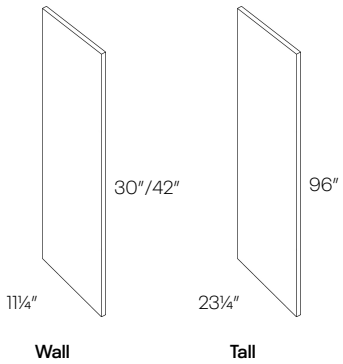

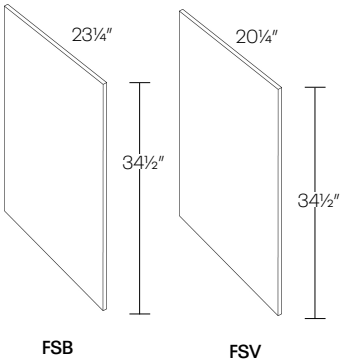

Touch Up Kit / Stain

Item Number	L
TUP	100
TUP-STN	118

- TUP-STN is one pint available in all finishes

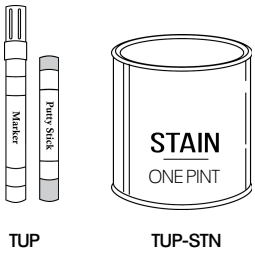

Cabinet & Door Information

Country Collection

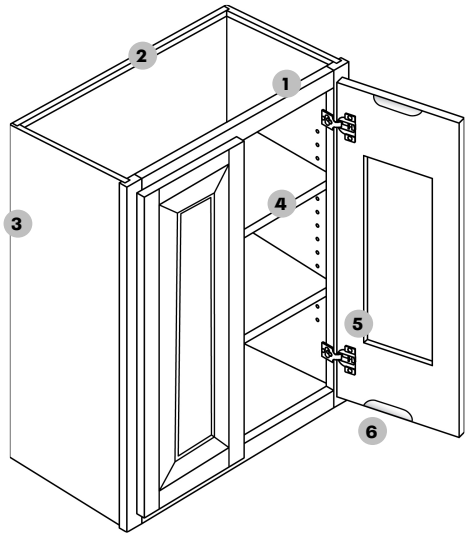

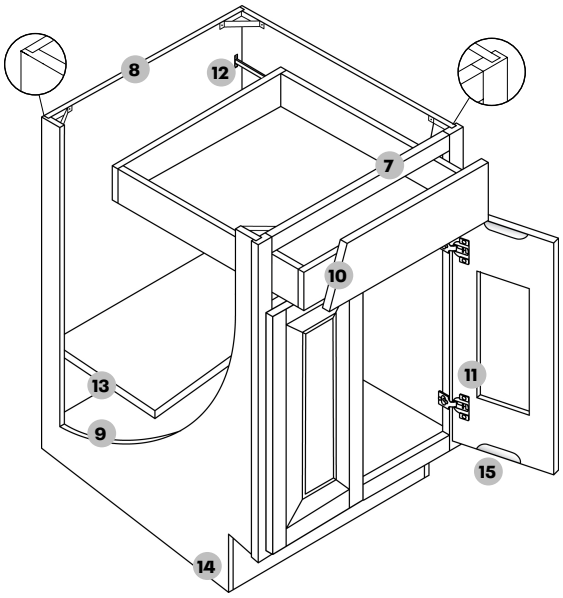

1. **Frame** — ¾″ thick, 1½″ wide, kiln-dried solid hardwood. Assembled with glue and nails, under clamp pressure, which ensures squareness.
2. **Back panel** — ¼″ substrate, with 3″ plywood surrounding frame,made of 1/2″ plywood. Rabbeted and stapled into cabinet sides, screwed into top and bottom. Includes 1½″ hanging rails.
3. **End panel** — Top and bottom 1/2″ plywood substrate, with light maple woodgrain laminate finish.
4. **Shelves** — ¾″ thick, plywood; fully adjustable
5. **Hinges** — Heavy duty steel concealed adjustable hinge.
6. **Doors** — Finger pull groove for easy access
7. **Base frame** — ¾″ thick, 1½″ wide, kiln-dried solid hardwood. Assembled with glue and nails, under clamp pressure, which ensures squareness.
8. **Back panel** — ½″ substrate plywood material. Rabbeted and stapled into cabinet sides, screwed into top and bottom.
9. **End panel** — ½″ plywood substrate, with light maple woodgrain laminate interior finish.
10. **Drawers** — ½″ Plywood sides with ⅜″ thick bottom fastened with screws
11. **Hinges** — Heavy duty steel concealed adjustable hinge.
12. **Glides** — High quality epoxy coated steel side mounted glides.
13. **Shelves** — ¾ thick, plywood; fully adjustable. (10″ deep)
14. **Toe kick** — 4 ½″ Toe kick with 2 ½ ″ inset on all standard base and vanity cabinets.
15. **Doors** — Finger pull groove for easy access

Country Oak

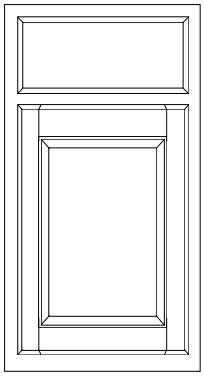

Finish	Price Code
C4 - Honey (Stain)	R

A standard 1″ reveal, 5 piece solid wood with a raised MDF veneer center panel Mortise and Tenon construction, slab drawer front. solid wood in a Honey finish.

***½″ Back Panel coming soon**

Specifications and Prices

Country Collection

12″-15″ High Wall Cabinet

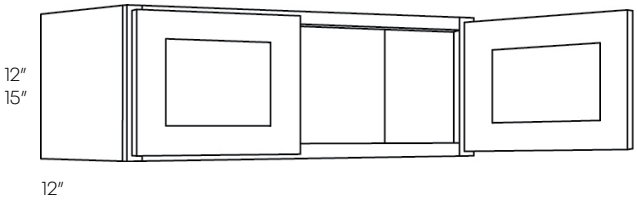

Item Number	R
3012	323
3312	334
3612	362
2415	320
3015	329
3315	344
3615	362

• No Shelf

18″ High Wall Cabinet

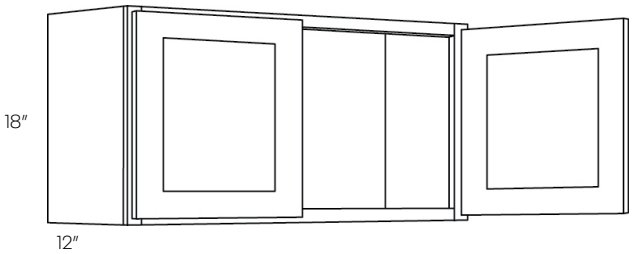

2118 (1 Door)	302
2418	320
3018	332
3318	360
3618	414

• No Shelf

24″ High Wall Cabinet

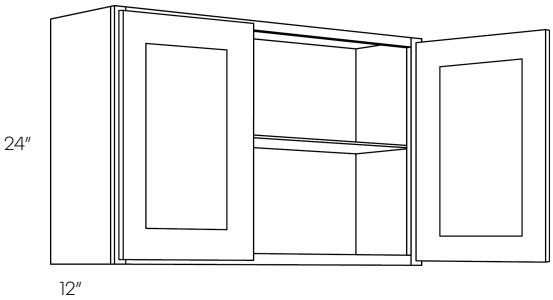

1824 (1 Door)	342
2424	452
2724	458
3024	471
3324	488
3624	523
4224	623
4824 (4 Doors)	696

24″ Deep Wall Cabinet

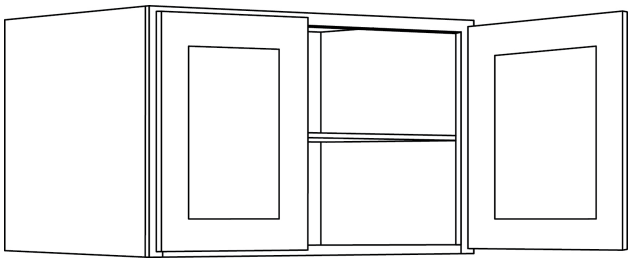

Item Number	R
3015X24	441
3024X24	613
3615X24	491
3624X24	708

30″ High 1 Door Wall Cabinet

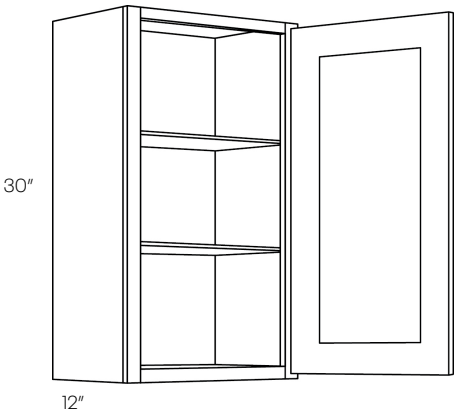

930	260
1230	289
1530	312
1830	351
2130	419

30″ High 2 Door Wall Cabinet

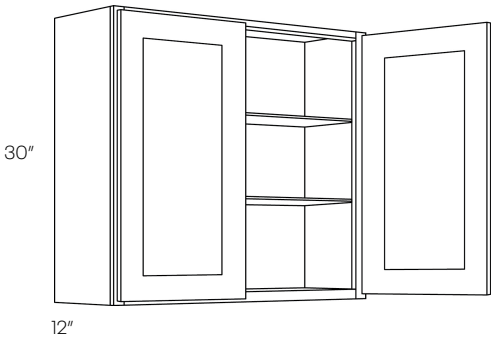

2430	447
2730	493
3030	504
3330	549
3630	584
3930	632
4230	670

Item Number	R
4830	759
5430	849

30″ High 4 Door Wall Cabinet

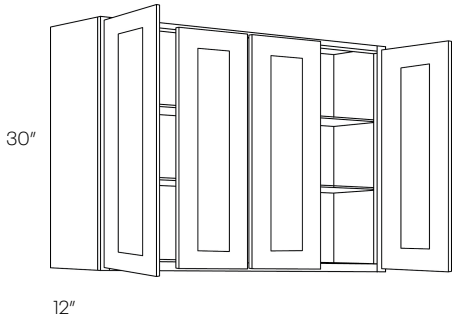

6030-O	866

• Opening Natural Interior Finish

30″ High Open Wall Cabinet

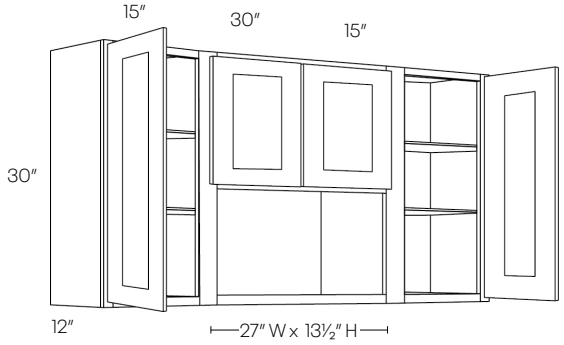

BLW27/3030	637
BLW36/3930	762
BLW39/4230	832
BLW42/4530	913

30″ High Blind Wall Cabinet

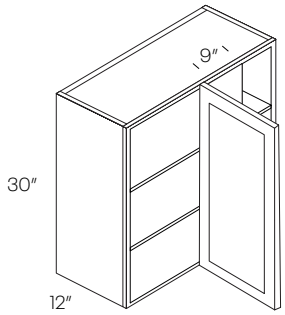

BLW27/BLW36

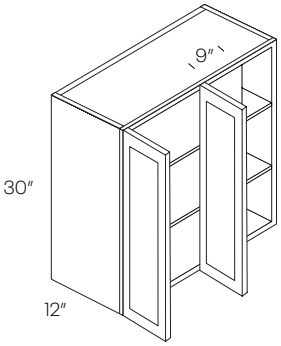

BLW39/BLW42

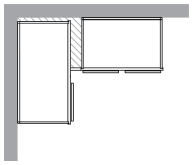

• Reversible L or R
• Can be installed at actual size

Cabinet	Min. Pull	Max. Pull	Actual Size	Door(s)	Door Opening
BLW27/3030	27″	30″	27″	1230	9″ X 27″
BLW36/3930	36″	39″	36″	2130	18″ X 27″
BLW39/4230	39″	42″	39″	2430	21″ X 27″
BLW42/4530	42″	45″	42″	2730	24″ X 27″

Item Number	R

30″ High Diagonal Corner Wall Cabinet

CW2430	651

• Requires 24″ x 24″ wall space

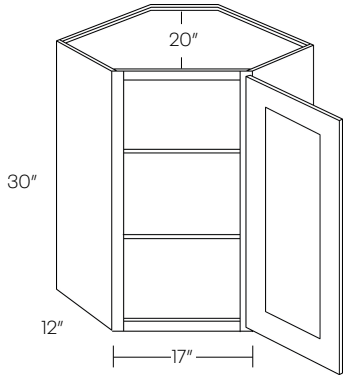

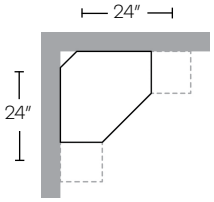

42″ High 1 Door Wall Cabinet

942	349
1242	380
1542	418
1842	465
2142	554

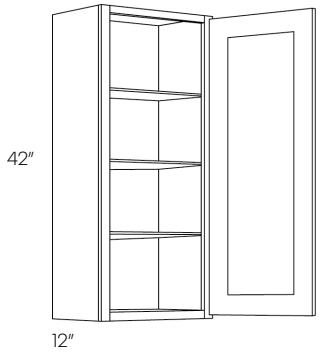

42″ High 2 Door Wall Cabinet

2442	595
2742	656
3042	680
3342	729
3642	772
4242	898

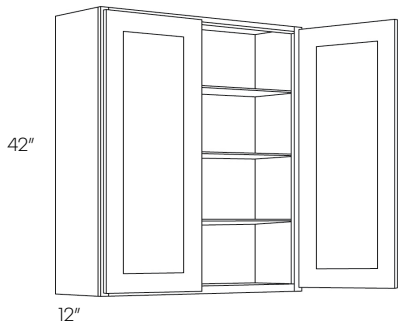

Item Number	R

42″ High Blind Wall Cabinet

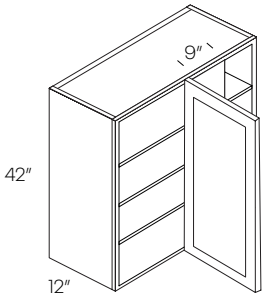

BLW27/BLW36

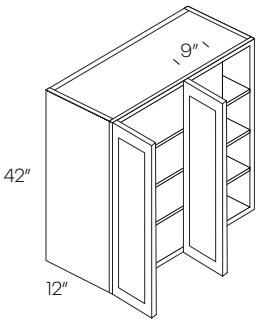

BLW39

BLW27/3042	822
BLW36/3942	987
BLW39/4242	1081

- Reversible L or R
- Can be installed at actual size

Cabinet	Min. Pull	Max. Pull	Actual Size	Door(s)	Door Opening
BLW27/3042	27″	30″	27″	1242	9″ X 39″
BLW36/3942	36″	39″	36″	2142	18″ X 39″
BLW39/4242	39″	42″	39″	2442	21″ X 39″

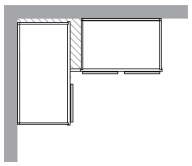

42″ High Diagonal Corner Wall Cabinet

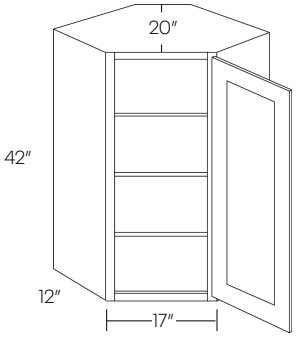

CW2442	849

- Requires 24″ x 24″ wall space

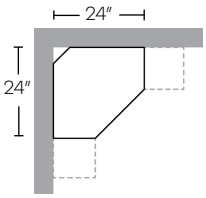

Item Number	R
MW3030	625

Microwave Cabinet

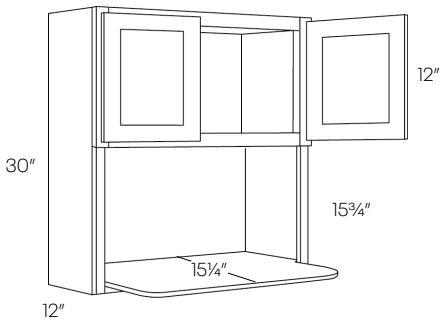

- Opening 27″ x 15¾″
- Shelf is 15¼″ deep
- Opening has natural finish
- Shelf ships loose

1 Door Base Cabinet

Item Number	R
B9	380
B12	434
B15	456
B18	479
B21	544

• 10″ Deep Shelf

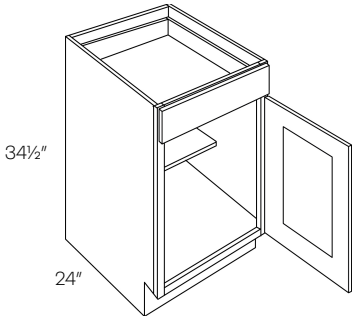

1 Drawer 2 Door Base Cabinet

B24	580
B27	640

• 10″ Deep Shelf

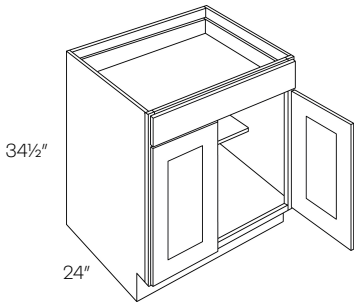

2 Drawer 2 Door Base Cabinet

B30	698
B33	746
B36	783
B39	833
B42	878

• 10″ Deep Shelf

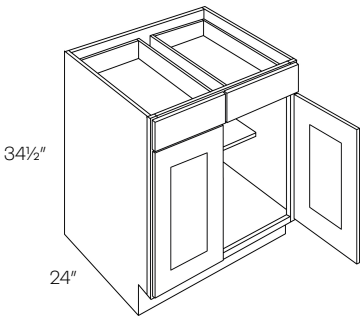

2 Drawer 4 Door Base Cabinet

Item Number	R
B48	980

• 10″ Deep Shelf

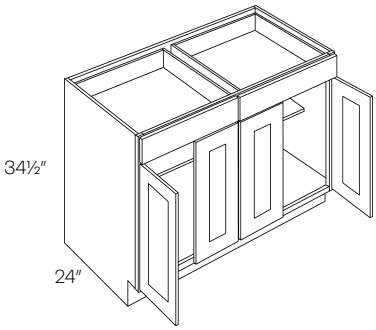

3 Drawer Base Cabinet

DB12	639
DB15	670
DB18	690
DB21	718
DB24	743

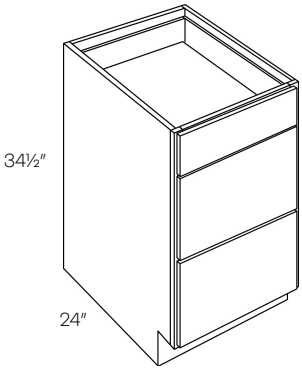

Blind Base Cabinet

BLB36/39	777
BLB39/42	803
BLB42/45	857

• Reversible Left or Right
• Must be pulled to the minimum position
*Left blind shown

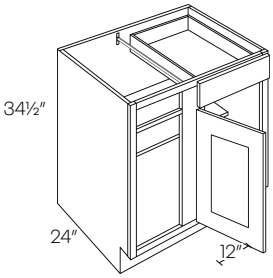

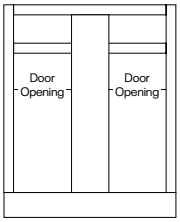

Cabinet	Min. Pull	Max. Pull	Actual Size	Door(s)	Door Opening
BLB36/39	36″	39″	30″	B12	9″
BLB39/42	39″	42″	36″	B15	12″
BLB42/45	42″	45″	42″	B18	15″

	Item Number	R
Diagonal Corner Sink Base Cabinet	**CSB36**	1178

• Requires 36″ x 36″ wall space.

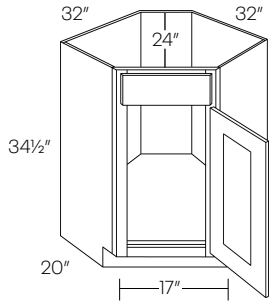

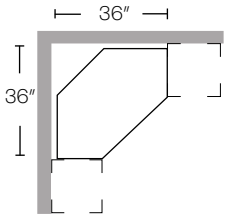

	Item Number	R
Diagonal Corner Sink Front	**CSF36***	312
	CSFFL36 (Floor)	145

*Requires 36″ x 36″ wall space.
*Requires Floor (sold separately)

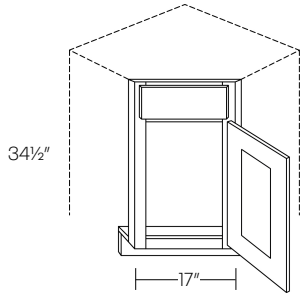

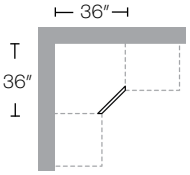

	Item Number	R
Lazy Susan Corner Base Cabinet	**CAR36**	1270

• Wood rotating shelf
• Requires 33″ x 33″ / 36″ x36″ wall space
• Pie cut for 33″ is 9″ and for 36″ i s 12″

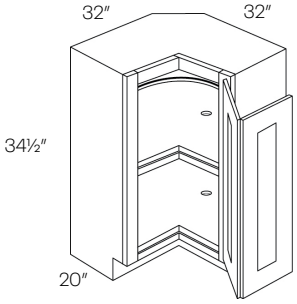

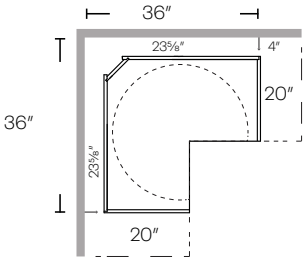

	Item Number	R
1 Drawer Front 2 Door Sink Base	**SB24**	575
	SB27	617

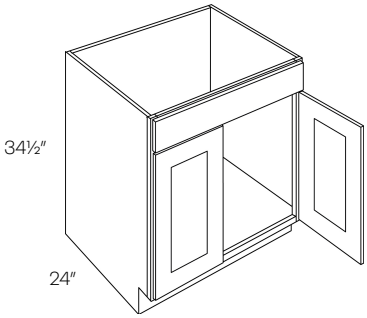

	Item Number	R
2 Drawer Front 2 Door Sink Base	**SB30**	656
	SB33	693
	SB36	710
	SB39	728
	SB42	743

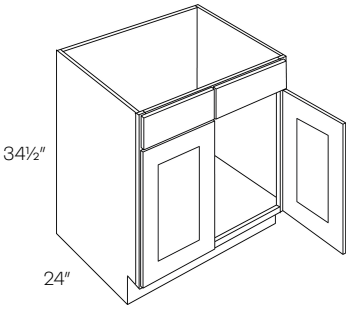

	Item Number	R
2 Drawer 4 Door Base Cabinet	**SB48**	835

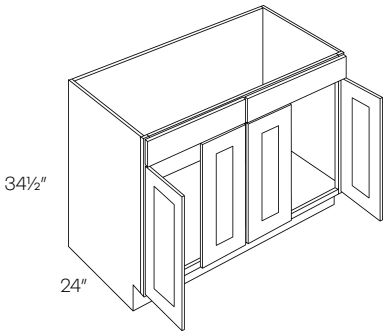

Item Number	R

Combination Sink Base Cabinet

SB42RD	789
SB42LD	789

- Drawer is 12″ wide
- Right Drawer (RD) shown

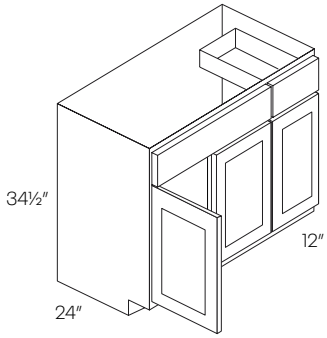

Combination Sink Base Cabinet

SB54	934
SB60	1017

	Door	Sink	Door
SB54	12″	30″	12″
SB60	15″	30″	15″

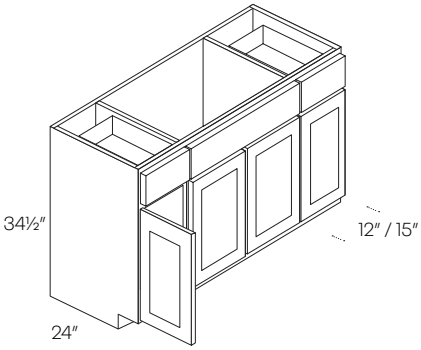

Single Door Utility Cabinet

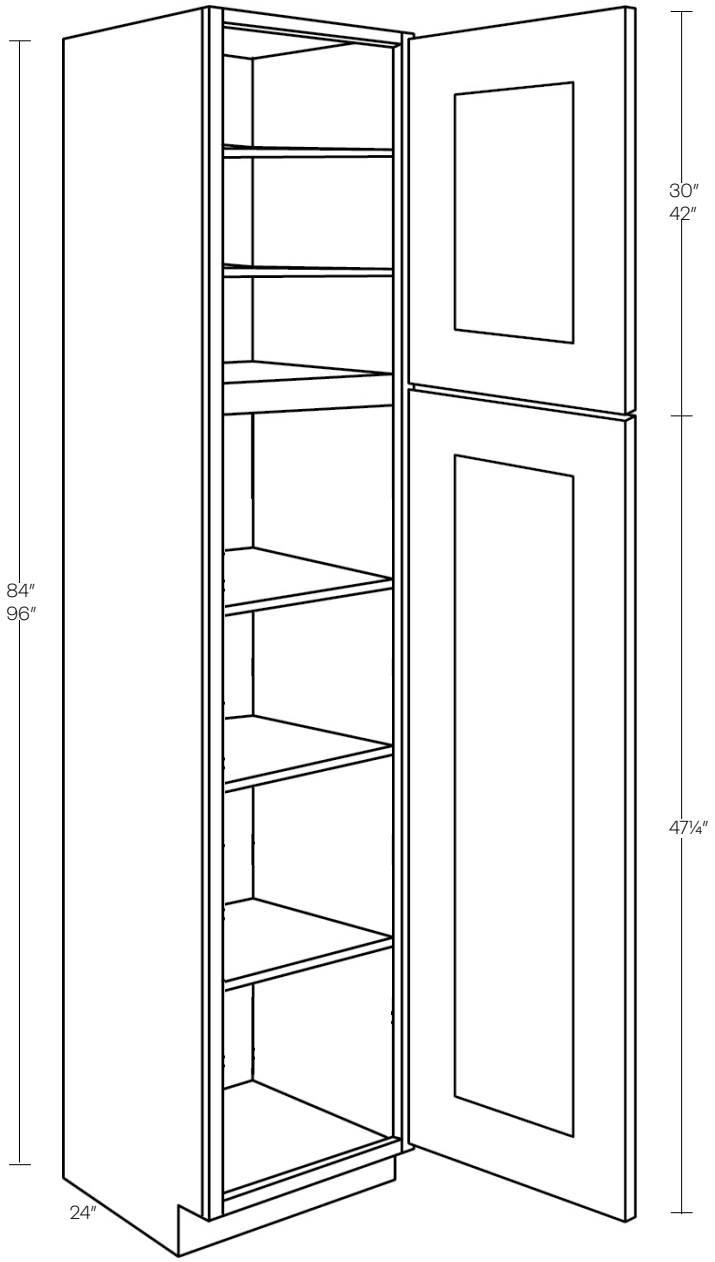

Item Number	R
UC1824X84*	1453
UC1824X96*	1888

- 3 bottom adjustable shelves
- 84″ has 2 upper shelves
- 96″ has 3 upper shelves

Double Door Utility Cabinet

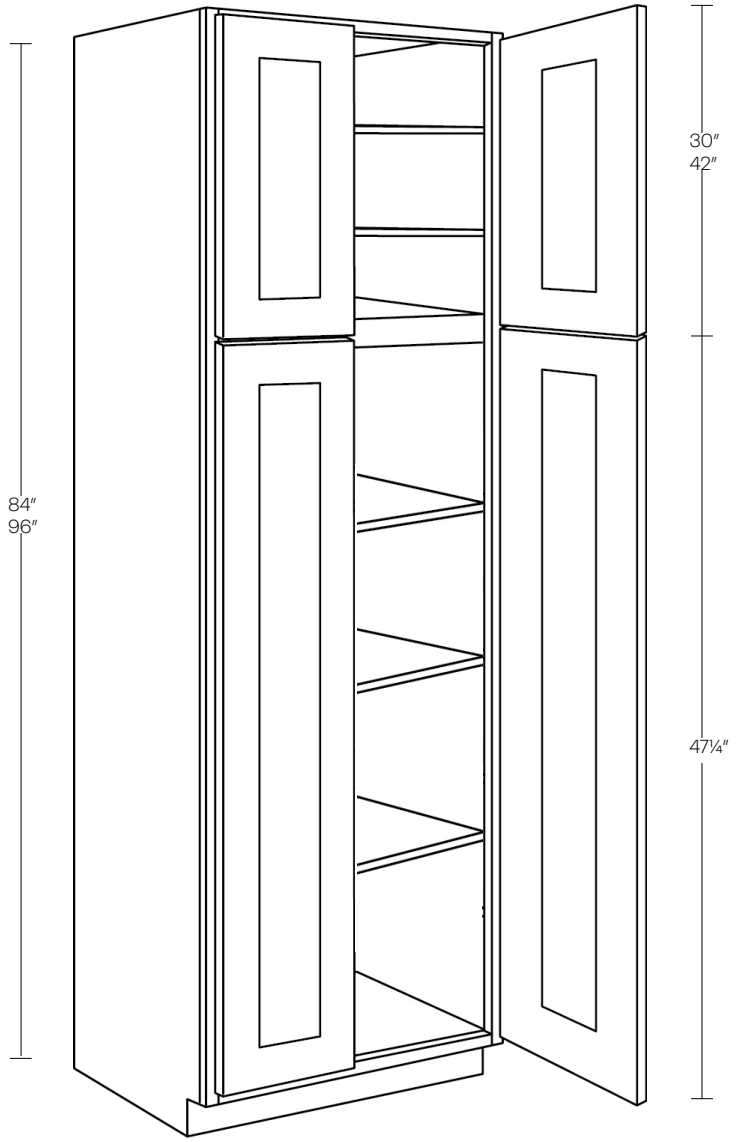

Item Number	R
UC2424X84*	1673
UC2424X96*	2112

- 3 bottom adjustable shelves
- 84″ has 2 upper shelves
- 96″ has 3 upper shelves

*POS not available

	Item Number	R
1 Door Vanity Sink Base Cabinet	**V1816-32.5**	284

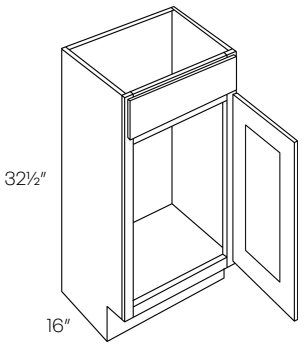

Vanity Drawer Base Cabinet	**VDB15-32.5**	653
	VDB18-32.5	668

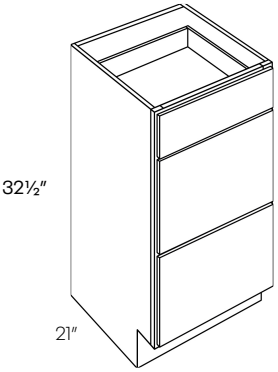

2 Door Vanity Sink Base Cabinet	**V2418-32.5**	366
	V3018-32.5	465
	V2421-32.5	394
	V3021-32.5	493
	V3621-32.5	596

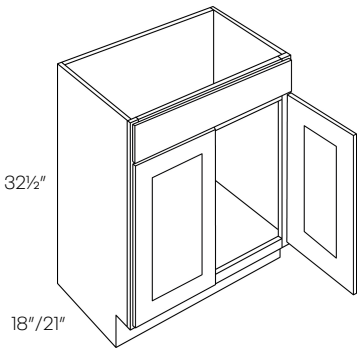

Item Number	R

1 Door 2 Drawer Vanity Sink Base Cabinet

V2421D-32.5	569
V3021D-32.5	780

• Drawers on right hand side only

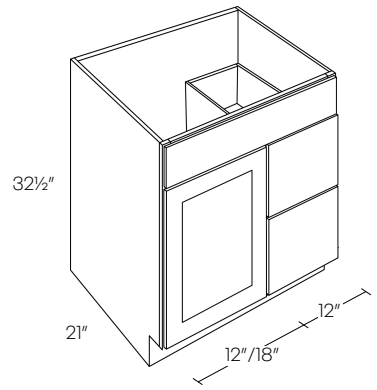

2 Door 2 Drawer Vanity Sink Base Cabinet

V3621D-32.5	881
V4221D-32.5	894

• Drawers on right hand side only

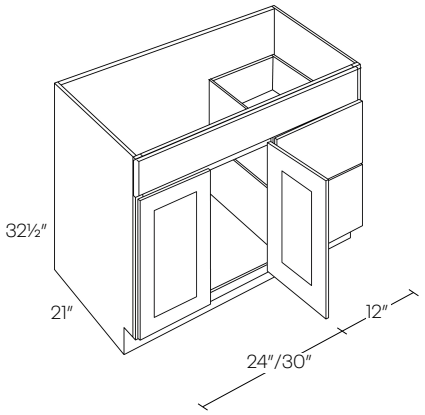

2 Door 4 Drawer Vanity Sink Base Cabinet

V4821DD-32.5	1023

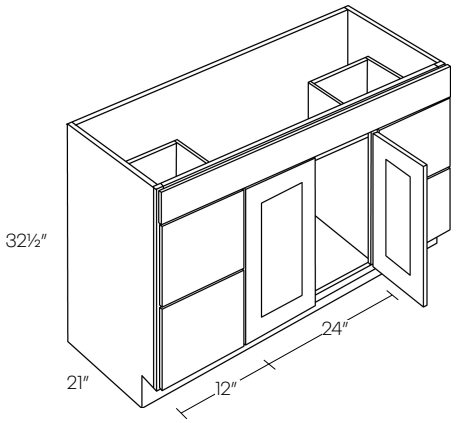

	Item Number	R
Single Door Medicine Cabinet	**MC1830**	285

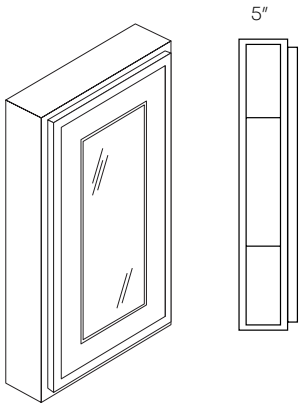

Double Door Medicine Cabinet	**MC2430**	508
	MC3030	567
	MC3630	638

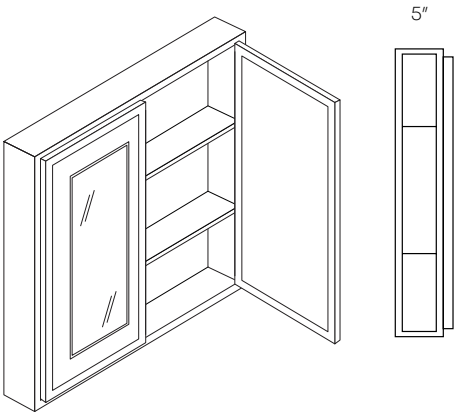

Filler

Item Number	R
F330	47
F630	73
F342	63
F642	103
F396	120
F696	234

- Fillers finished on all 4 sides

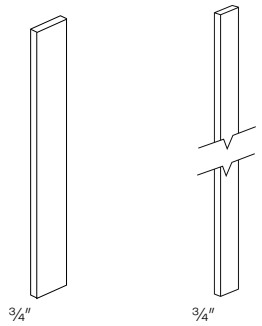

F330/F630/F342/F642 F396/F696

Plywood Panel

Item Number	R
PLY4X8	349

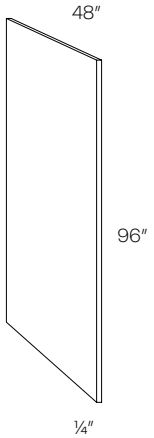

Base End Panel

DWR3	159

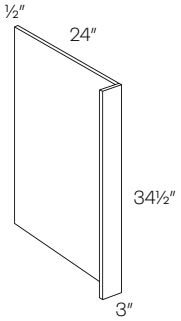

DWR

Crown Molding

CRM	115

- 8 feet long

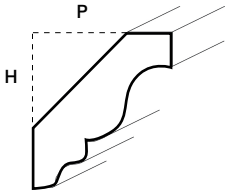

CRM
Height: 2″
Projection: 2″

Refrigerator End Panel

REP384	444
REP396	489

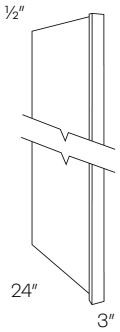

REP3

Corner Molding

OCM	109
ICM	109

- 8 feet long

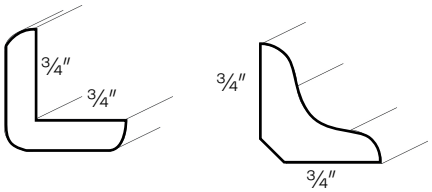

OCM ICM

	Item Number	R
Scribe Molding	**SCM**	72

- 8 feet long

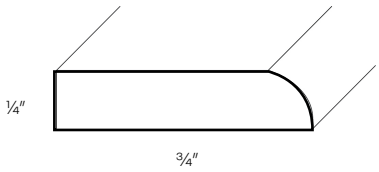

	Item Number	R
Toe Kick	**TKS**	81

- 8 feet long

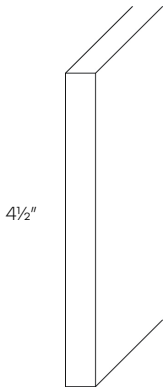

Touch Up Kit	**TUP**	100

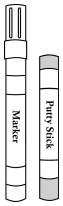

TUP

Cabinet & Door Information

Concord Collection

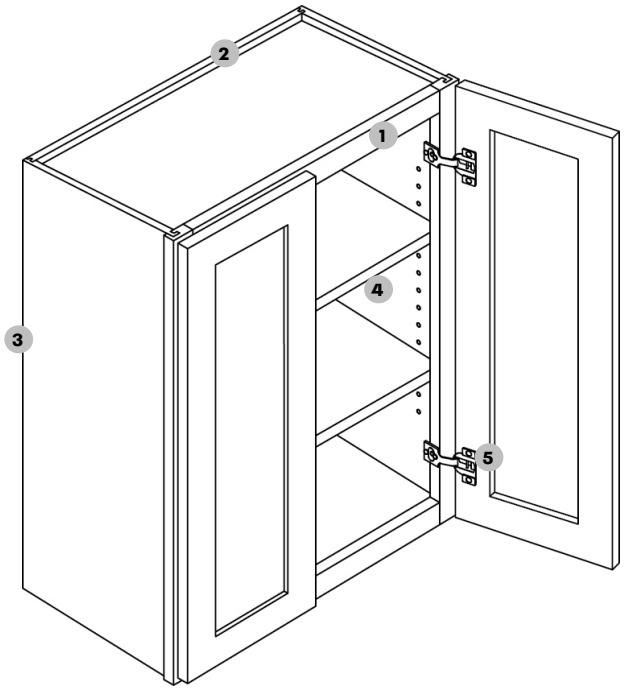

1. **Frame** — ¾″ thick, 1½″ wide, kiln-dried solid hardwood. Frame and sides are installed with our interlocking system, which insures easy assembly and inseparable strength
2. **Back panel** — Full ½″ plywood back, installed with our interlock system. Screwed to top and bottom. Exterior is finished.
3. **End panel** — ½″ Plywood sides. Finished exterior with a natural wood-finish veneer interior.
4. **Shelves** — 3/4″ thick, plywood; fully adjustable.
5. **Hinges** — Heavy duty steel concealed hinge, adjustable with soft-close mechanism.

   *36″ and 42″ Wall cabinets will have 3 hinges

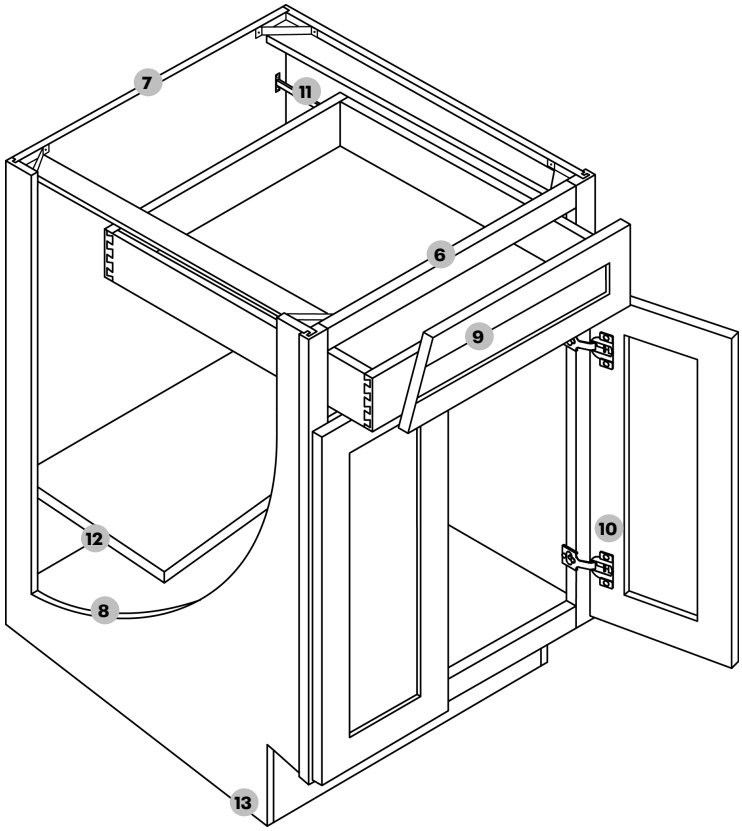

6. **Base frame** — ¾″ thick, 1½″ wide, kiln-dried solid hardwood. Frame and sides are installed with our interlocking system, which insures easy assembly and inseparable strength. Exterior is finished.
7. **Back panel** — Full ½″ plywood back, installed with our interlock system. Screwed to top and bottom.
8. **End panel** — ½″ Plywood sides. Finished exterior with a natural wood-finish veneer interior.
9. **Drawers** — ¾″ Solid wood, dovetail construction. With high quality stainless steel full extension under-mount glide. With soft-close safety feature.
10. **Hinges** — Heavy duty steel concealed hinge, adjustable with soft-close mechanism.
11. **Glides** — High quality stainless steel full extension under-mount glide. With soft-close safety feature.
12. **Shelves** — 3/4″ thick, plywood; fully adjustable. (10″ deep)
13. **Toe kick** — 4 ½″ Toe kick with 2 ½″ inset on all standard base and vanity cabinets.

BLUM hinges and glides are available as an upgrade for an additional charge. Please contact your customer service representative for pricing.

Elegant

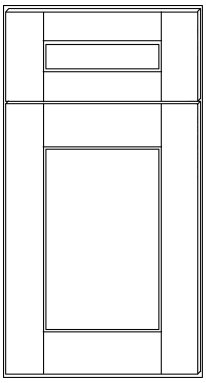

Finish	Price Code
EB02 - Smoky Grey (stain)	A
EB10 - White (paint)	A
EB22 - Dove (paint)	A
EB23 - Stone (hybrid stain)	B
EB27 - Ocean (paint)	A

*Please note: EB23 Stone is now under the 'B' Price Code

A full overlay 5 piece solid wood, with solid MDF veneer flat center panel. Mortise and Tenon construction.

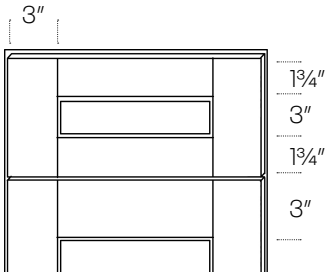

Fashion

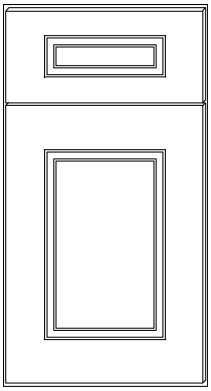

Finish	Price Code
FB10 - White (paint)	B
FB27 - Ocean (paint)	B

A full overlay 5 piece solid wood, with solid MDF veneer flat center panel. Mortise and Tenon construction.

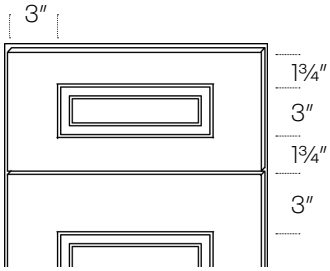

Park Avenue

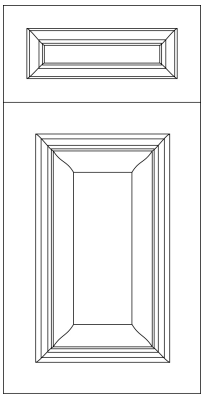

Finish	Price Code
PB10 - White (paint)	C
PB27- Ocean (paint)	C

A full overlay 5 piece solid wood, raised panel MDF veneer center. Mitered construction.

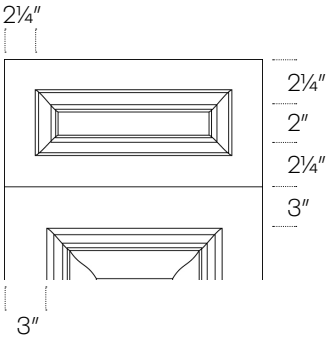

Richmond

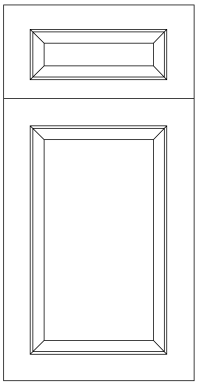

Finish	Price Code
RB10 - White (paint)	C
RB23 - Stone (hybrid stain)	C

A full overlay 5 piece solid wood, with solid MDF veneer flat center panel. Mitered construction.

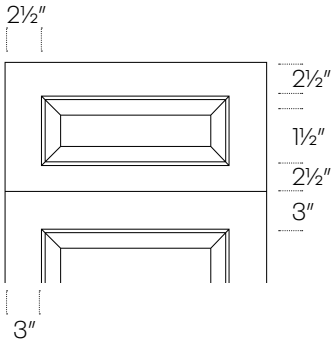

Specifications and Prices

Concord Collection

12″-15″ High Wall Cabinet

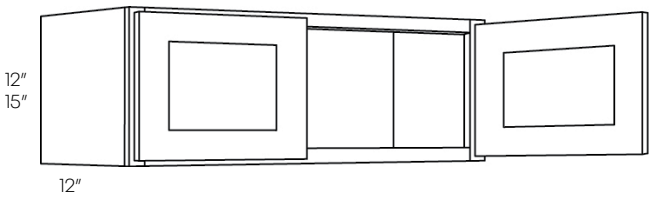

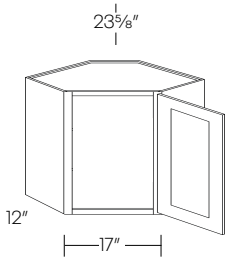

Item Number	A	B	C
3012	428	454	479
3312	453	480	508
3612	493	523	553
1215 (one door)	275	311	330
1515 (one door)	294	327	347
1815 (one door)	317	344	365
2115 (one door)	339	361	383
CW2415 (one door)	634	671	711
2415	431	457	481
3015	444	471	498
3315	469	498	525
3615	540	573	604

- No Shelf
- Can be cut for glass

18″ High Wall Cabinet

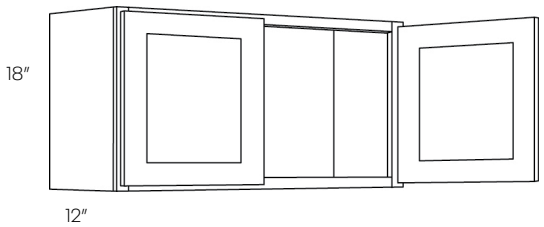

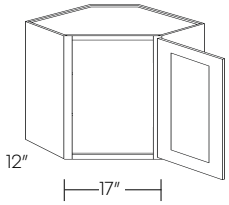

1218 (one door)	314	356	377
1518 (one door)	338	374	396
1818 (one door)	363	394	417
2118 (one door)	408	433	457
CW2418	725	769	816
2418	451	478	504
3018	474	502	531
3318	489	518	548
3618	559	593	626
3918*	626	N/A	N/A

- No Shelf
- Can be cut for glass

*3918 only available in EB10

24″ High Wall Cabinet

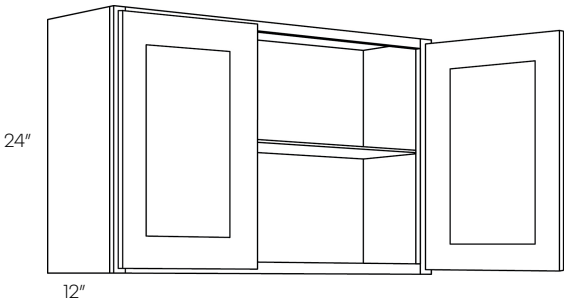

2424	607	645	681
2724	611	648	684
3024	620	657	693
3324	658	698	737
3624	706	748	791
3924*	734	N/A	N/A
4224	795	844	892

- Can be cut for glass

*3924 only available in EB10

Horizontal Wall Cabinet

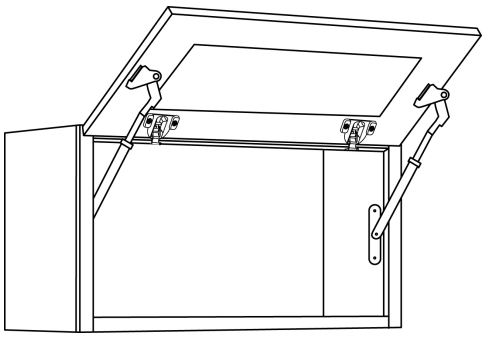

Item Number	A	B	C
3012-HD	687	730	770
3015-HD	704	746	789
3018-HD	710	754	795
3024-HD *	878	931	984
3612-HD	753	797	843
3615-HD	798	847	895
3618-HD	818	868	917
3624-HD*	965	1024	1082

*Has one shelf
• Can be cut for glass

24″ Deep Wall Cabinet

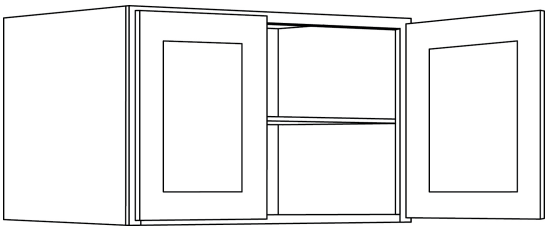

3012X24	603	640	677
3015X24	639	680	718
3018X24	676	717	758
3021X24**	754	N/A	N/A
3024X24*	831	880	930
3312X24	615	653	689
3315X24	672	712	754
3318X24	729	772	816
3324X24*	891	944	998
3612X24	663	705	744
3615X24	720	763	807
3618X24	774	822	869
3624X24*	955	1013	1071
3924x24**	1099	N/A	N/A

• Can be cut for glass
* Shelf only on 24″ high cabinets
**Only available in EB10

30″ High Single Door Wall Cabinet

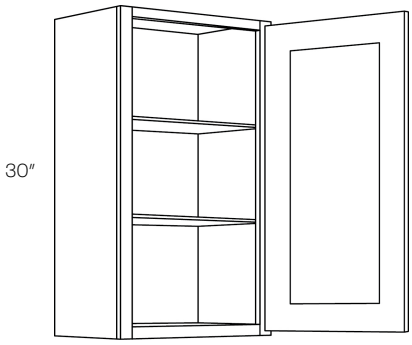

930	351	372	393
1230	392	416	439
1530	422	447	472
1830	475	503	532
2130	567	602	636

• Can be cut for glass

30″ High Double Door Wall Cabinet

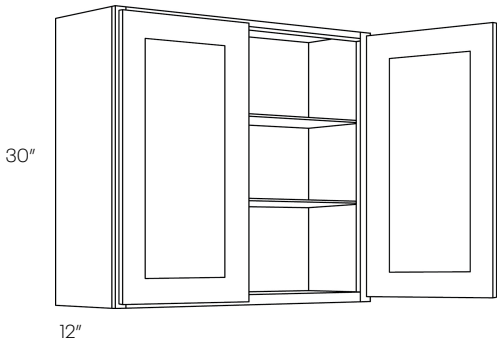

Item Number	A	B	C
2430	604	641	678
2730	667	708	747
3030	683	725	766
3330	745	791	835
3630	791	839	887
3930	855	907	959
4230	922	977	1033

• Can be cut for glass

30″ High 4 Door Wall Cabinet

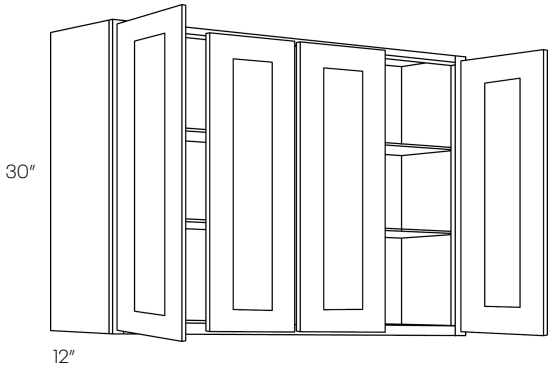

4830	1037	1100	1162

• Can be cut for glass

30″ High Blind Wall Cabinet

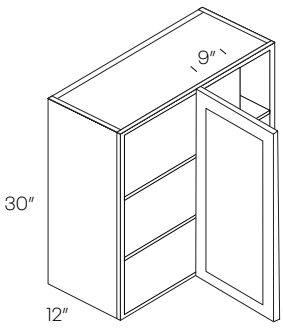

BLW27/BLW36

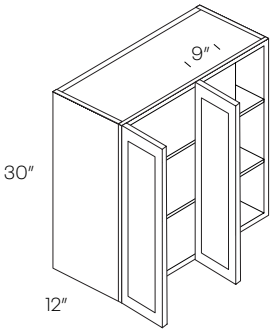

BLW39/BLW42

BLW27/3030 (1 door)	861	913	964
BLW36/3930 (1 door)	1033	1095	1157
BLW39/4230	1127	1194	1263
BLW42/4530	1237	1312	1385

• Reversible left or right
• Can be cut for glass

Cabinet	Min. Pull	Max. Pull	Actual Size	Door(s)	Door Opening
BLW27/3030	27″	30″	27″	1230	9″ X 27″
BLW36/3930	36″	39″	36″	2130	18″ X 27″
BLW39/4230	39″	42″	39″	2430	21″ X 27″
BLW42/4530	42″	45″	42″	2730	24″ X 27″

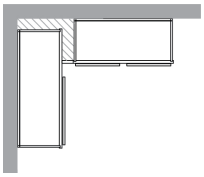

	Item Number	A	B	C
30″ High Diagonal Corner Wall Cabinet	**CW2430**	881	935	987

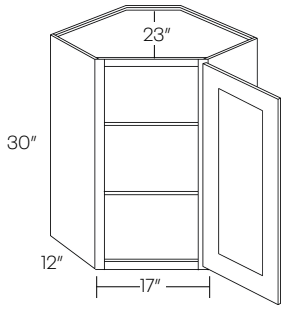

- Can be cut for glass
- 2430 uses 14 11/16″ door
- Requires 24″ X 24″ wall space

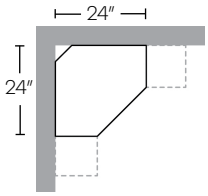

30″ High Corner Wall Cabinet	**WSQ2430**	947	1003	1060

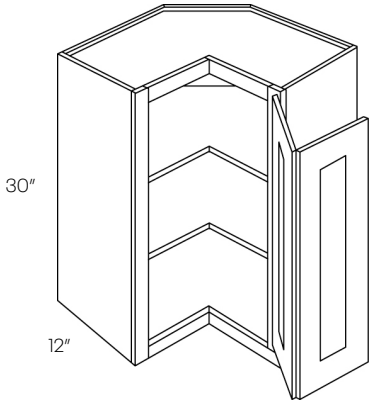

- Requires 24″ X 24″ wall space
- Pie is 12″ X 12″

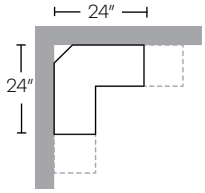

30″ High Single Mullion Door Wall Cabinet	**MD-WFI1530**	N/A	N/A	890
	MD-WFI1830	N/A	N/A	1008

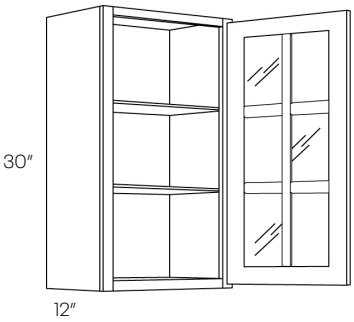

- Glass not included
- Finished interior
- MD only in: PB
- Not available in RB

30″ High Double Mullion Door Wall Cabinet

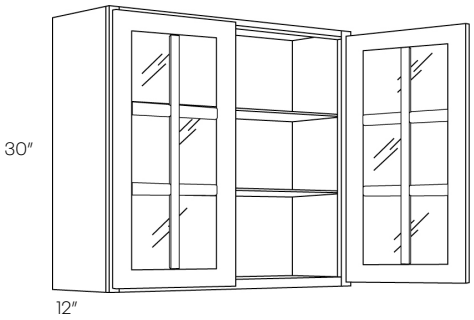

Item Number	A	B	C
MD-WFI3030	N/A	N/A	1087
MD-WFI3630	N/A	N/A	1220

- Glass not included
- Finished interior
- MD only in: PB
- Not available in RB

30″ High Corner Mullion Door Wall Cabinet

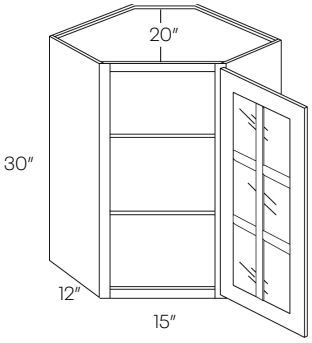

MD-CWFI2430	N/A	N/A	1516

- Requires 24″ X 24″ wall space
- Glass not included
- Finished interior
- MD only in: PB
- Not available in RB

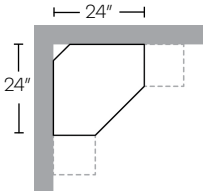

36″ High Single Door Wall Cabinet

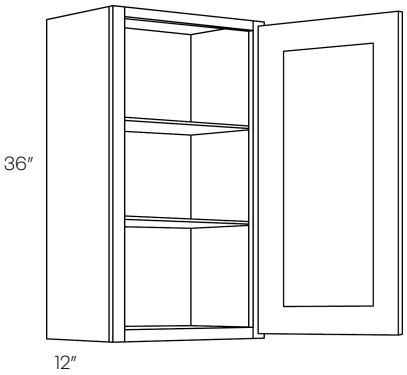

936	422	447	472
1236	466	494	522
1536	507	539	569
1836	564	599	633
2136	678	719	760

- Can be cut for glass

36″ High Double Door Wall Cabinet

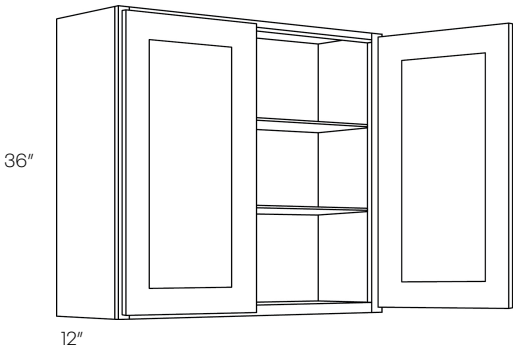

Item Number	A	B	C
2436	722	766	809
2736	798	847	895
3036	833	884	934
3336	891	944	998
3636	942	999	1056
4236	1106	1172	1239

- Can be cut for glass

36″ High Blind Wall Cabinet

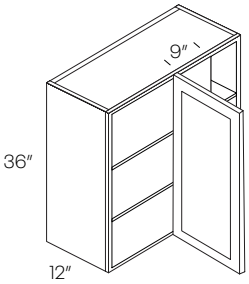

BLW27/BLW36

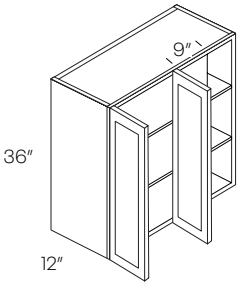

BLW39

BLW27/3036	1002	1062	1122
BLW36/3936	1190	1263	1333
BLW39/4236	1319	1399	1479

- Reversible left or right
- Can be cut for glass

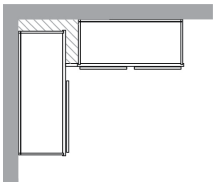

Cabinet	Min. Pull	Max. Pull	Actual Size	Door(s)	Door Opening
BLW27/3036	27″	30″	27″	1236	9″ X 33″
BLW36/3936	36″	39″	36″	2136	18″ X 33″
BLW39/4236	39″	42″	39″	2436	21″ X 33″

36″ High Diagonal Corner Wall Cabinet

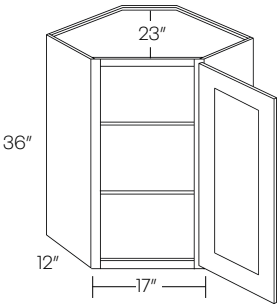

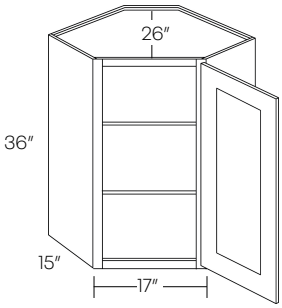

CW2436	928	984	1039
CW2736	1084	1150	1215

- Can be cut for glass
- 2430 uses 14 11/16″ door; 2730 uses 16 3/16″ door
- Requires 24″ X 24″ / 27″ X 27″ wall space

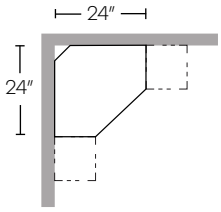

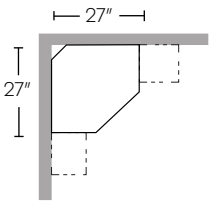

	Item Number	A	B	C
36″ High Corner Wall Cabinet	**WSQ2436**	996	1056	1116

- Requires 24″ X 24″ wall space
- Pie is 12″ X 12″

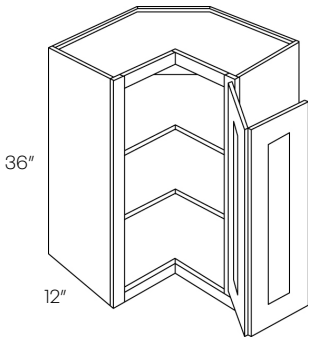

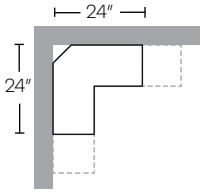

36″ High Single Mullion Door Wall Cabinet	**MD-WFI1536**	N/A	N/A	1021
	MD-WFI1836	N/A	N/A	1145

- Glass not included
- Finished interior
- MD only in: PB
- Not available in RB

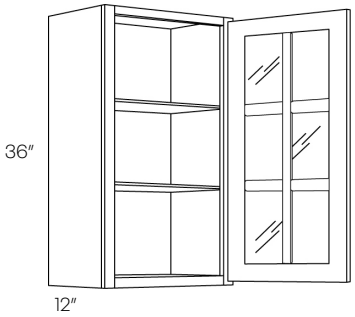

36″ High Double Mullion Door Wall Cabinet	**MD-WFI3036**	N/A	N/A	1788
	MD-WFI3636	N/A	N/A	2049

- Glass not included
- Finished interior
- MD only in: PB
- Not available in RB

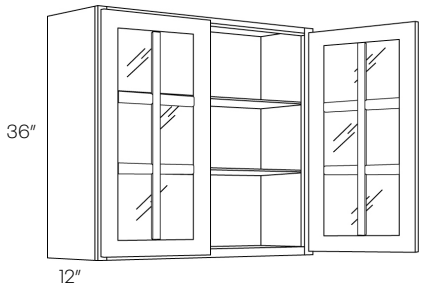

36″ High Corner Mullion Door Wall Cabinet

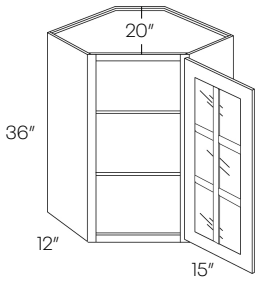

Item Number	A	B	C
MD-CWFI2436	N/A	N/A	1735

- Glass not included
- Finished interior
- MD only in: PB
- Not available in RB

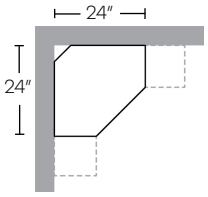

42″ High Single Door Wall Cabinet

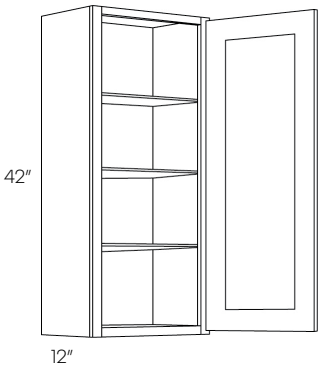

942	470	499	527
1242	515	546	577
1542	565	600	634
1842	627	665	704
2142	752	796	842

- Can be cut for glass

42″ High Double Door Wall Cabinet

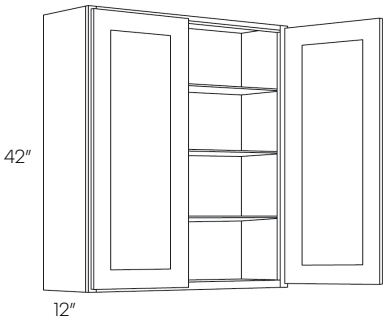

2442	807	855	903
2742	886	939	992
3042	917	973	1027
3342	987	1048	1107
3642	1046	1109	1171
4242	1216	1290	1362

- Can be cut for glass

42″ High Blind Wall Cabinet

Item Number	A	B	C
BLW27/3042	1116	1183	1250
BLW36/3942	1339	1420	1500
BLW39/4242	1463	1553	1641

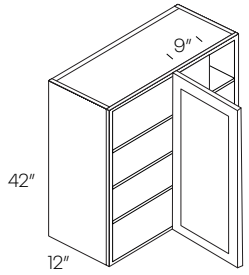

BLW27/BLW36

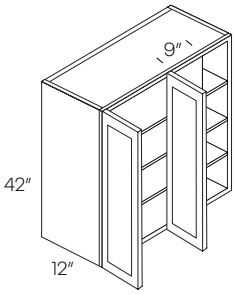

BLW39

- Can be cut for glass
- Reversible left or right

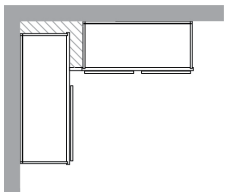

Cabinet	Min. Pull	Max. Pull	Actual Size	Door(s)	Door Opening
BLW27/3042	27″	30″	27″	1242	9″ X 39″
BLW36/3942	36″	39″	36″	2142	18″ X 39″
BLW39/4242	39″	42″	39″	2442	21″ X 39″

42″ High 4 Door Wall Cabinet

CW2442	1150	1220	1289
CW2742	1339	1420	1500

- Can be cut for glass
- 2430 uses 14 11/16″ door; 2730 uses 16 3/16″ door
- Requires 24″ X 24″ / 27″ X 27″ wall space

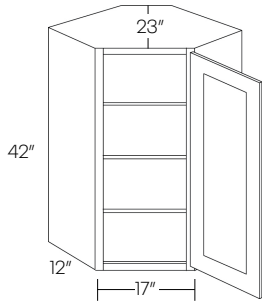

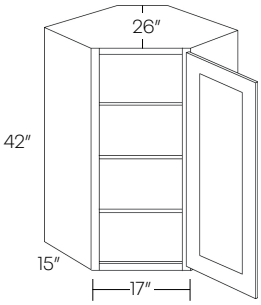

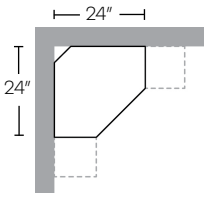

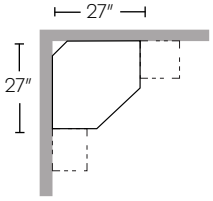

42″ High Corner Wall Cabinet

WSQ2442	1234	1309	1383

- Requires 24″ X 24″
- Pie is 12″ X 12″

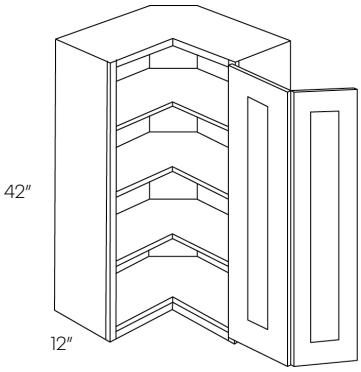

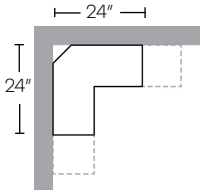

42″ High Single Mullion Door Wall Cabinet

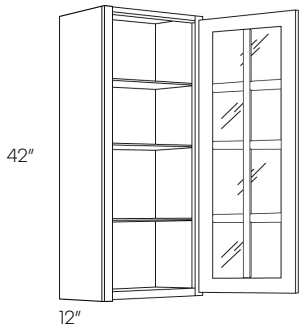

Item Number	A	B	C
MD-WFI1542	N/A	N/A	1157
MD-WFI1842	N/A	N/A	1288

- Glass not included
- Finished interior
- MD only in: PB
- Not available in RB

42″ High Double Mullion Door Wall Cabinet

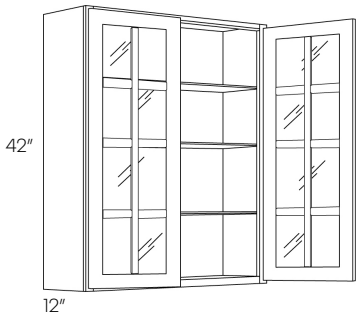

MD-WFI3042	N/A	N/A	2019
MD-WFI3642	N/A	N/A	2294

- Glass not included
- Finished interior
- MD only in: PB
- Not available in RB

42″ High Corner Mullion Door Wall Cabinet

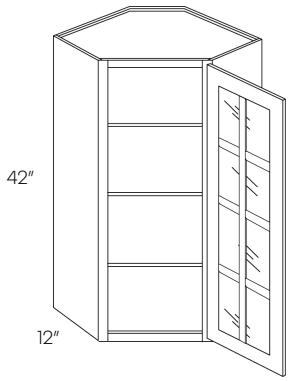

MD-CWFI2442	N/A	N/A	1953

- Requires 24″ X 24″ wall space
- Glass not included
- Finished interior
- MD only in: PB
- Not available in RB

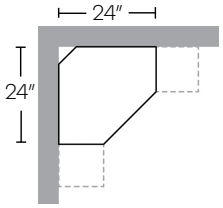

Plate & Wine Rack Cabinet

Item Number	A	B	C
PR3018	593	593	593
WR3018	593	593	593
WCX1818	360	360	360
SGH30	192	192	192

• Finished interior

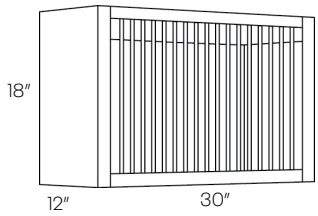

PR3018

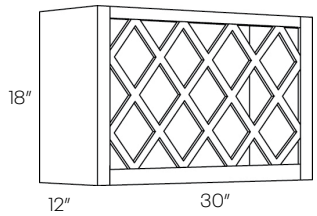

WR3018

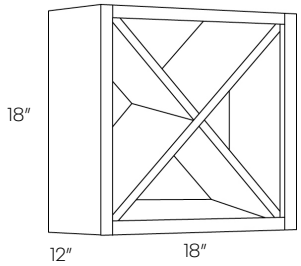

WCX1818

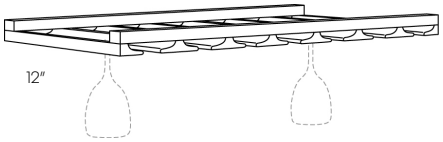

SGH30

Organizer Cubby

OC36	297	297	297
WC30	272	272	272
WC36	282	282	282

• Finished interior
• Wood is ¾″ thick

WC

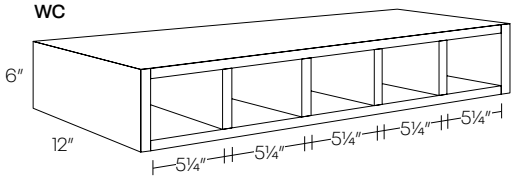

Knick Knack Wall Shelf

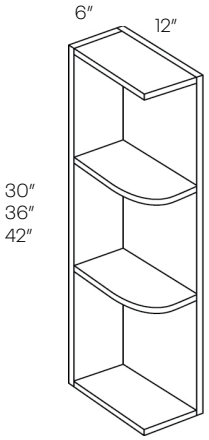

Item Number	A	B	C
WS30	208	208	208
WS36	245	245	245
WS42	278	278	278

- Reversible
- Fixed shelves
- 42″ Has 3 shelves

Single Door Wall End Cabinet

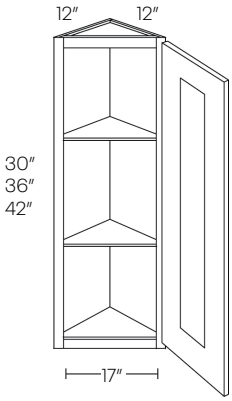

WEC1230	405	430	453
WEC1236	453	480	508
WEC1242	506	538	567

- 42″ Has 3 shelves

Double Door Wall End Cabinet

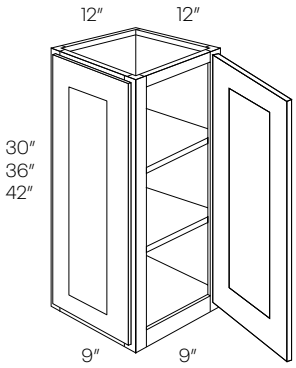

WECD1230	506	538	567
WECD1236	567	602	636
WECD1242	633	671	708

- 42″ Has 3 shelves

Wall Spice Cabinet

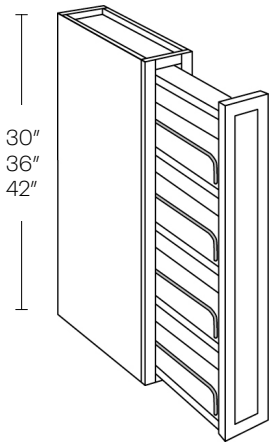

Item Number	A	B	C
WSP30	450	477	503
WSP36	523	555	586
WSP42	553	586	621

• Cabinet is 6″ wide

Microwave Cabinet

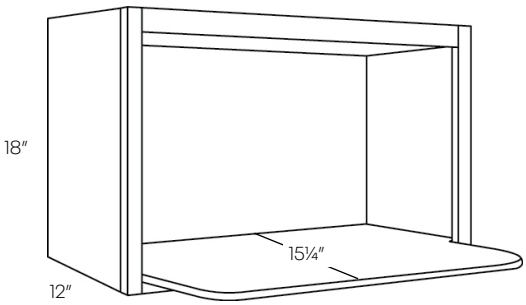

MW3018	507	507	507

• Finished interior
• Opening 27″ W X 14¼″ H
• Shelf ships loose
• Depth of the shelf may be cut-down

Single Door & Drawer Base Cabinet

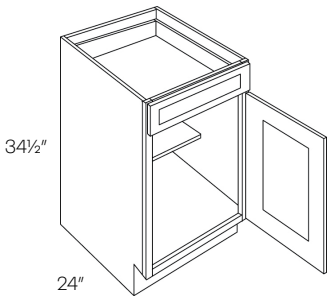

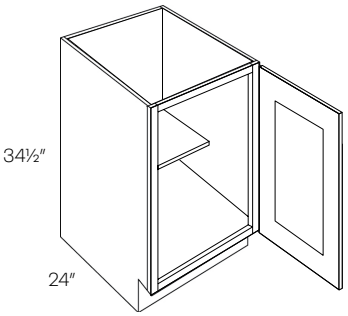

Full Height Door

Item Number	A	B	C
B9-FH	563	598	632
B9	563	598	632
B12	635	674	711
B15	662	702	742
B18	698	739	782
B21	783	830	876

• Full height doors are available add 20%

Single Drawer Double Door Base Cabinet

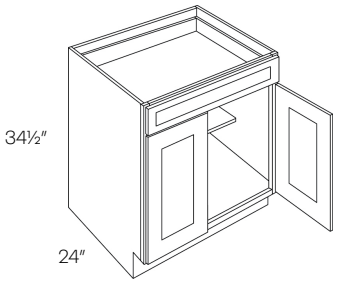

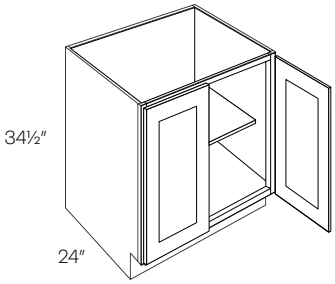

Full Height Door

B24	843	893	943
B27	922	977	1033

• Full height doors are available add 20%

Double Drawer & Door Base Cabinet

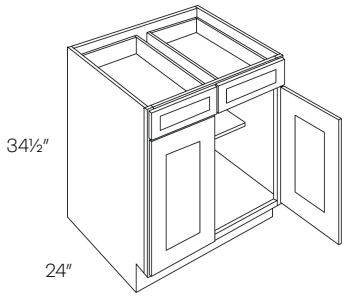

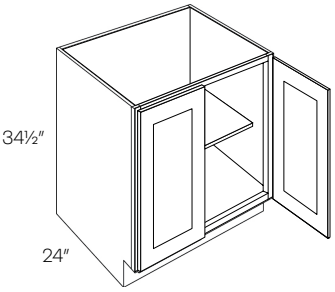

Full Height Door

B30	1046	1109	1171
B33	1110	1179	1244
B36	1160	1229	1299
B39	1225	1299	1373
B42	1294	1373	1451

• Full height doors are available add 20%

Item Number	A	B	C
B48	1434	1520	1607

Double Drawer & 4 Door Base Cabinet

• Full height doors are available add 20%

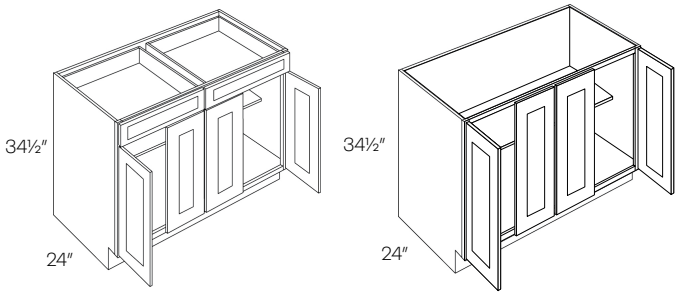

Full Height Door

B12-POS1	927	983	1038
B15-POS1	962	1021	1079
B18-POS1	1020	1081	1142
B21-POS1	1117	1184	1251

Single Door & Drawer Base Cabinet W/ 1 POS

• Full height doors are available add 20%
• Ball bearing soft close glides for POS
•POS has natural finish

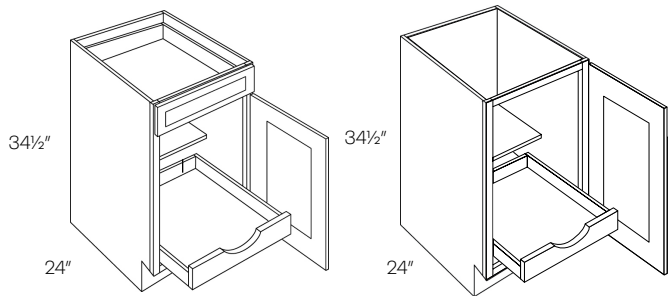

Full Height Door

B24-POS1	1206	1278	1351
B27-POS1	1295	1374	1452

Single Drawer Double Door Base Cabinet W/1 POS

• Full height doors are available add 20%
• Ball bearing soft close glides for POS
•POS has natural finish

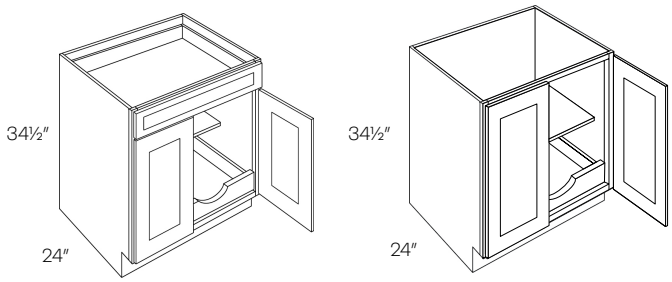

Full Height Door

Double Drawer & Door Base Cabinet W/1 POS

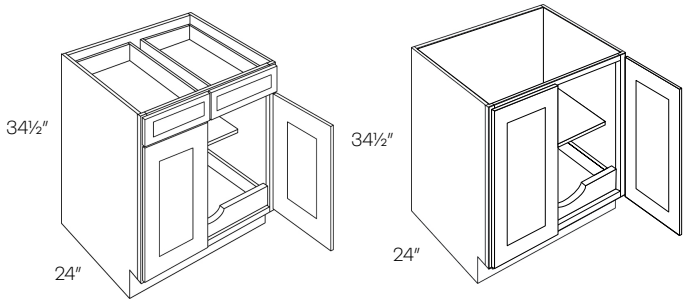

Full Height Door

Item Number	A	B	C
B30-POS1	1433	1519	1605
B33-POS1	1509	1601	1691
B36-POS1	1580	1674	1770
B42-POS1	1862	1974	2087

- Full height doors are available add 20%
- Ball bearing soft close glides for POS
- POS has natural finish

Double Drawer & 4 Door Base Cabinet W/2 POS

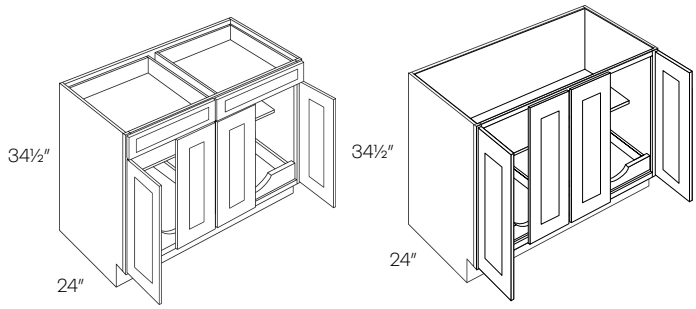

Full Height Door

B48-POS2 (Has 2 POS)	2061	2183	2307

- Has two POS
- Full height doors are available add 20%
- Ball bearing soft close glides for POS
- POS has natural finish

Single Door & Drawer Base Cabinet W/ 2 POS

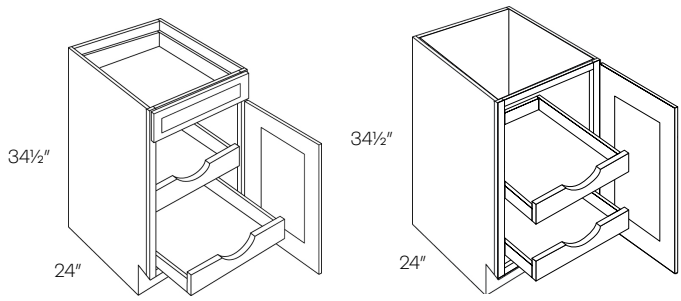

Full Height Door

B12-POS2	1119	1186	1253
B15-POS2	1164	1234	1304
B18-POS2	1242	1316	1391
B21-POS2	1351	1433	1512

- Full height doors are available add 20%
- Ball bearing soft close glides for POS
- POS has natural finish

Single Drawer Double Door Base Cabinet W/2 POS

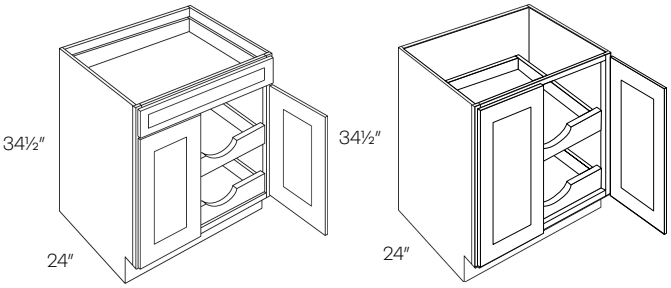

Full Height Door

Item Number	A	B	C
B24-POS2	1468	1558	1645
B27-POS2	1569	1665	1758

- Full height doors are available add 20%
- Ball bearing soft close glides for POS
- POS has natural finish

Double Drawer & Door Base Cabinet W/2 POS

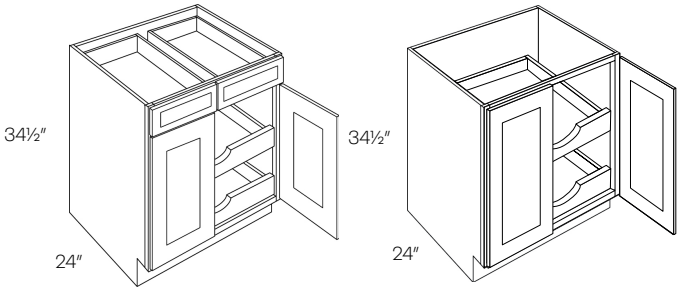

Full Height Door

B30-POS2	1720	1823	1927
B33-POS2	1809	1918	2026
B36-POS2	1899	2013	2127
B42-POS2	2430	2577	2722

- Full height doors are available add 20%
- Ball bearing soft close glides for POS
- POS has natural finish

Double Drawer & 4 Door Base Cabinet W/4 POS

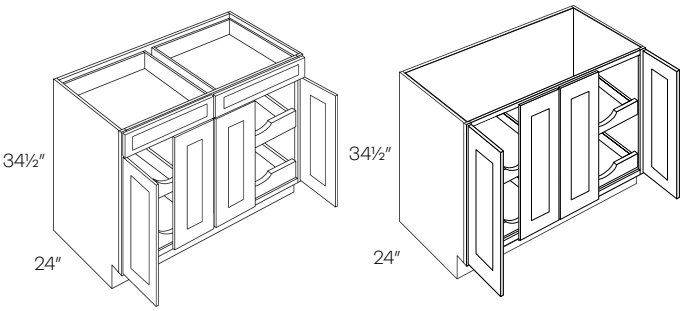

Full Height Door

B48-POS4	2685	2848	3009

- Has four POS
- Full height doors are available add 20%
- Ball bearing soft close glides for POS
- POS has natural finish

3 Drawer Base Cabinet

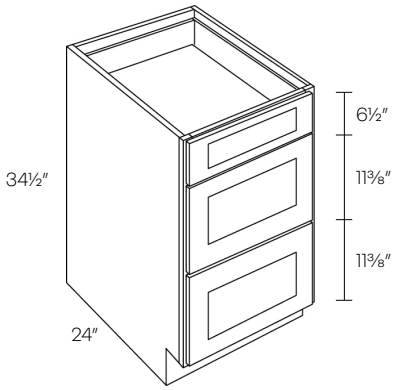

Item Number	A	B	C
DB12	1006	1067	1128
DB15	1047	1110	1172
DB18	1075	1140	1205
DB21	1109	1178	1243
DB24	1146	1216	1286
DB27	1203	1275	1348
DB30	1236	1311	1384
DB33	1297	1375	1453
DB36	1349	1431	1504

Blind Base Cabinet

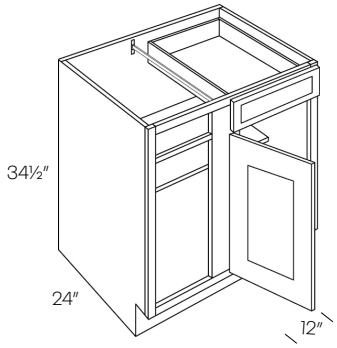

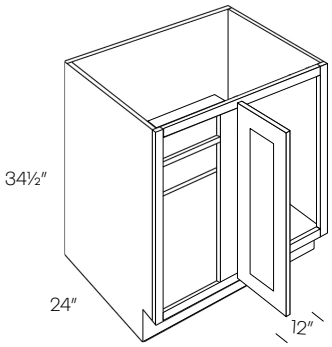

Full Height Door

BLB36/39	1100	1166	1232
BLB39/42	1130	1197	1266
BLB42/45	1209	1281	1354
BLB45/48	1315	1395	1474

- Reversible Left or Right
- Must be pulled to the minimum position

* Left blind shown

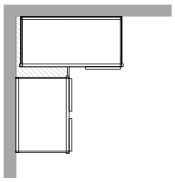

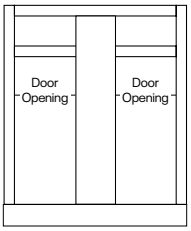

Cabinet	Min. Pull	Max. Pull	Actual Size	Door(s)	Door Opening
BLB36/39	36″	39″	27″	B9	6″
BLB39/42	39″	42″	33″	B12	9″
BLB42/45	42″	45″	39″	B15	12″
BLB45/48	45″	48″	45″	B18	15″

2 Drawer Base Cabinet

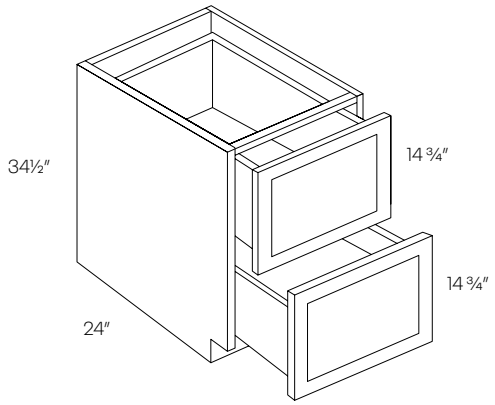

Item Number	A	B	C
DB24-2	1146	1216	1286
DB30-2	1236	1311	1384
DB33-2	1297	1375	1453
DB36-2	1349	1431	1504

Diagonal Corner Sink Base Cabinet

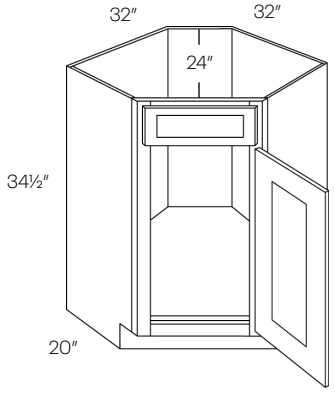

CSB36	1552	1645	1738

• Requires 36″ X 36″ wall space

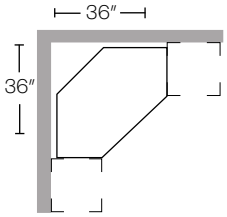

Diagonal Corner Sink Front

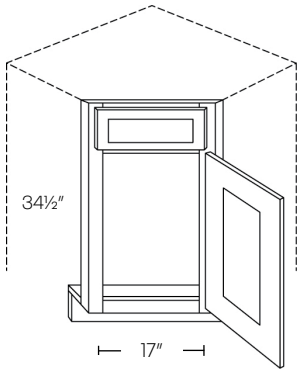

CSF36*	444	471	498
CSFFL36 (Floor)	155	155	155

*Requires 36″ X 36″ wall space
*Requires a floor (sold separately)

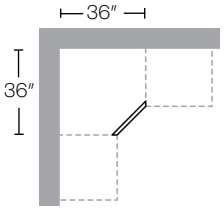

	Item Number	A	B	C
Easy Reach Corner Base Cabinet	**BSQC33R**	1595	1692	1788
	BSQC33L	1595	1692	1788
	BSQC36R	1595	1692	1788
	BSQC36L	1595	1692	1788

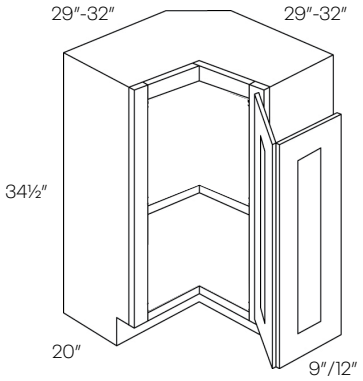

• Requires 33″ X 33″ / 36″ X 36″ wall space

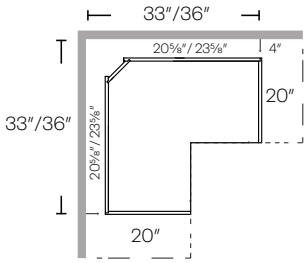

Lazy Susan Corner Base Cabinet	**CAR33R**	2065	2189	2314
	CAR33L	2065	2189	2314
	CAR36R	2065	2189	2314
	CAR36L	2065	2189	2314

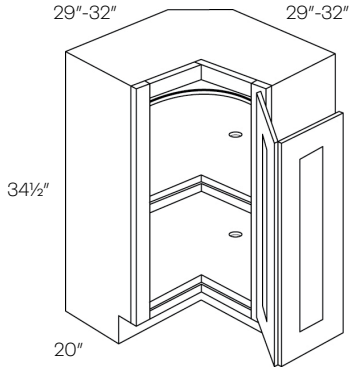

• Requires 33″ X 33″ / 36″ X 36″ wall space
• Pie is 9″ X 9″ / 12″ X 12″
• Wooden Lazy Susan

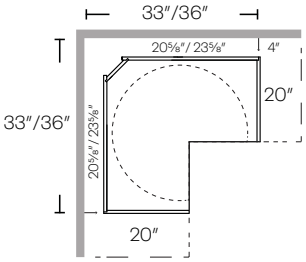

1 Drawer Front 2 Door Sink Base Cabinet	**SB24**	777	823	870
	SB27	839	890	940
	TOT*	243	243	243

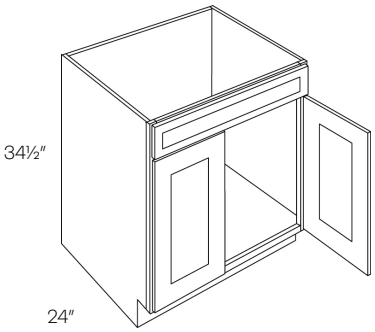

* Factory Installed
* Tilt out tray is 11¼″

Tilt out tray

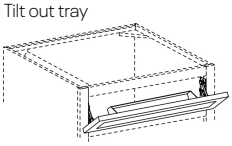

Double Drawer Front 2 Door Sink Base Cabinet

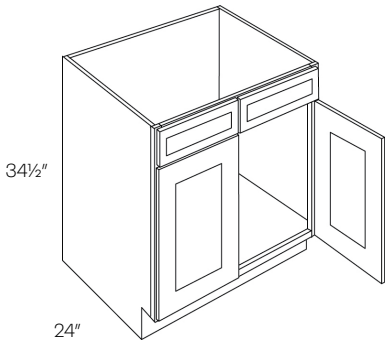

Item Number	A	B	C
SB30	888	941	995
SB33	949	1006	1062
SB36	959	1017	1075
SB39	1023	1084	1145
SB42	1047	1110	1172
TOT*	243	243	243

*Factory Installed
*Cabinets include two 11¼″ tilt out trays

Tilt out tray

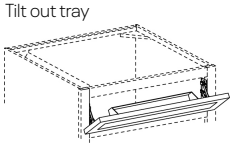

Double Drawer Front 4 Door Sink Base Cabinet

SB48	1171	1243	1313

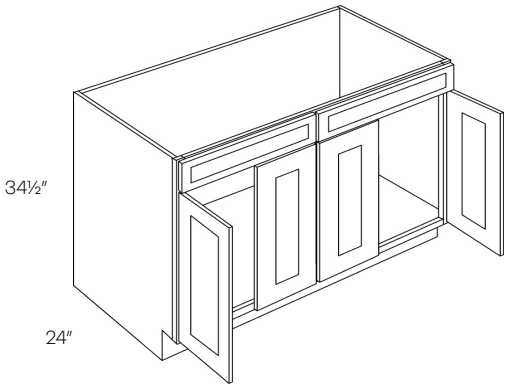

Double Door Farm Sink Base Cabinet

SB30-FS	944	999	1052
SB33-FS	1006	1063	1120
SB36-FS	1016	1075	1132

- Max trimmable 27″/30″/33″ X 10″
- Trimming to be done in field
- Has a fixed platform

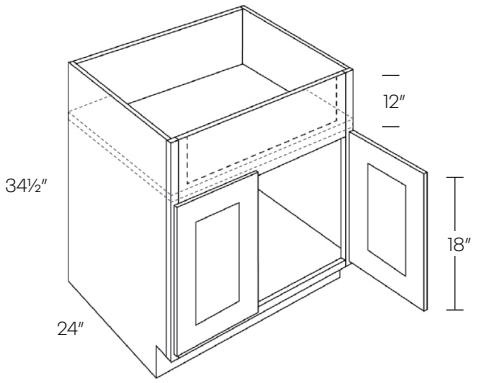

Item Number	A	B	C
SB30-HR	1329	1410	1488
SB33-HR	1386	1472	1554
SB36-HR	1443	1530	1616

Double Door Handicap Removable Sink Base Cabinet

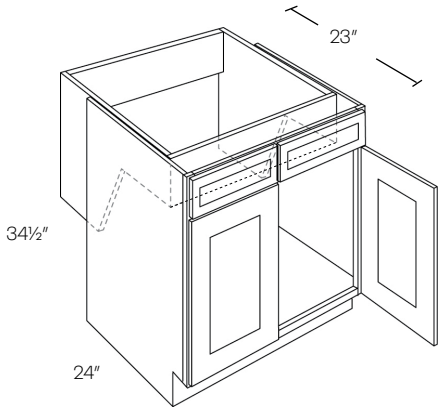

* Factory Installed
**Not ADA compliant

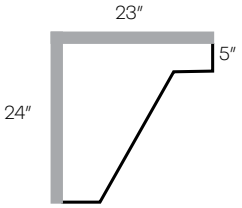

OVB30	681	721	762
MCB24*	1146	1216	1286
MCB27*	1191	1264	1335
MCB30*	1236	1311	1384

Oven Base & Microwave Base Cabinet

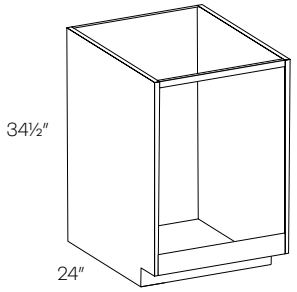

OVB30

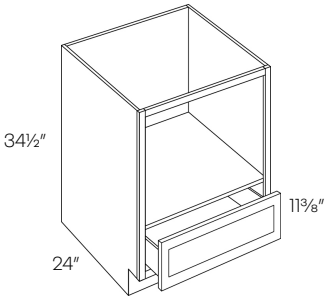

MCB24/MCB30

- OV front opening is 27″x27″
- MC front opening is 21″x16″ / 27″x16″

*Finished interior

BEC24	784	832	878

Base End Cabinet

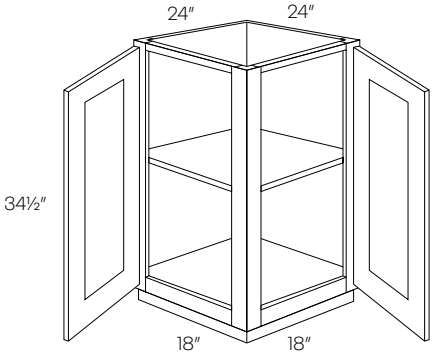

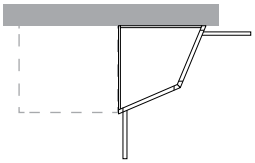

	Item Number	A	B	C
Straight Base End Cabinet	**BECS24**	784	832	878

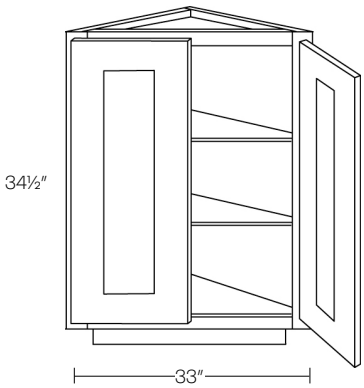

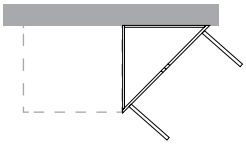

Angle Base End Cabinet	**BTC2412**	636	674	712

- Reversible
- Loose toe kick
- Hinged on 24″

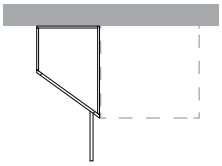

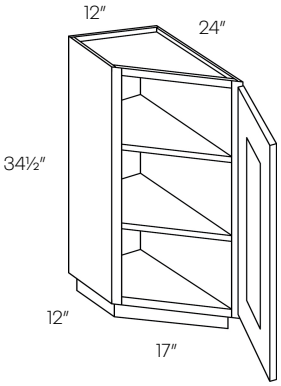

Base Spice Cabinet	**BSP6**	528	560	592
	BSP9	1075	1140	1205

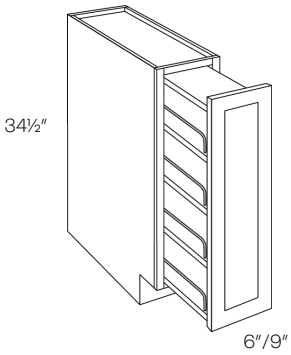

Waste Basket Cabinet

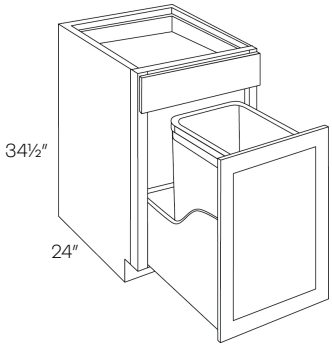

BWBK15

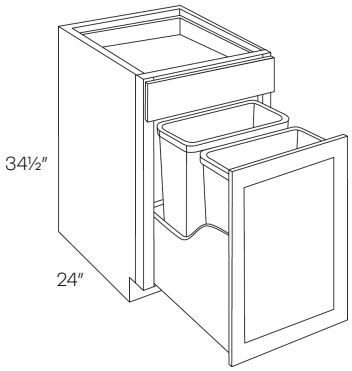

BWBK18

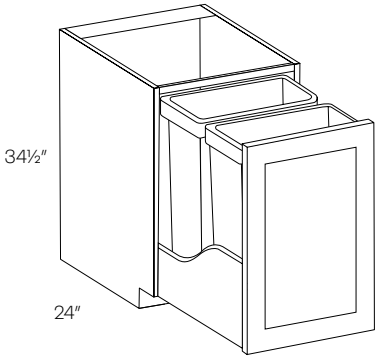

BWBK21-FH

Item Number	A	B	C
BWBK15 (Single basket)	1076	1141	1206
BWBK18 (Double basket)	1140	1208	1276
BWBK21-FH	1394	1477	1560

•Soft-close hinges and glides
• Includes 35qt. waste basket (BK18 includes two waste baskets)
• Full Height Waste Basket includes two 50qt. waste baskets
*Full height add 20% for BWBK15/18

Single Door Utility Cabinet

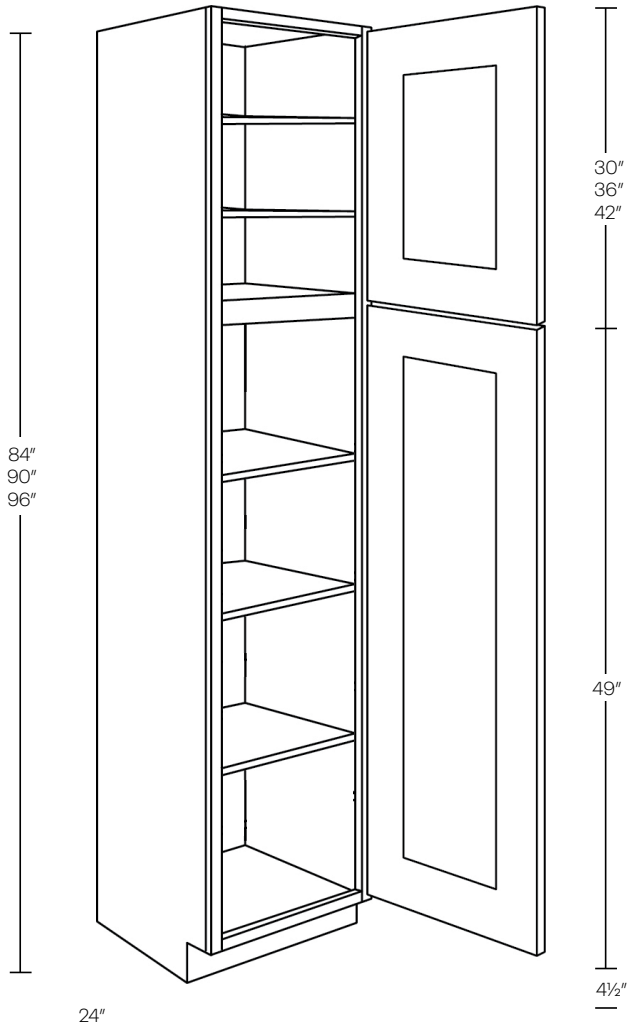

Item Number	A	B	C
UC1521X84	1905	2020	2134
UC1524X84	1905	2020	2134
UC1524X90	2097	2223	2348
UC1524X96*	2306	2445	2583
UC1821X84	2007	2128	2249
UC1824X84	2007	2128	2249
UC1824X90	2102	2341	2473
UC1824X96*	2428	2575	2720
POS15-3 (factory installed)	743	743	743
POS15-4 (factory installed)	1002	1002	1002
POS18-3 (factory installed)	866	866	866
POS18-4 (factory installed)	1088	1088	1088

- POS price is addition to cabinet list price
- POS uses dovetail construction
- POS has natural finish
- 4 bottom adjustable shelves

*84″ and 90″ have 2 upper shelves
* 96″ has 3 upper shelves

Pull Out Shelf

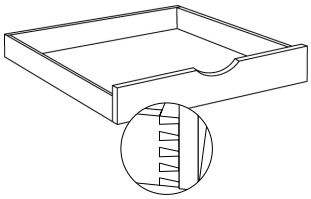

Double Door Utility Cabinet

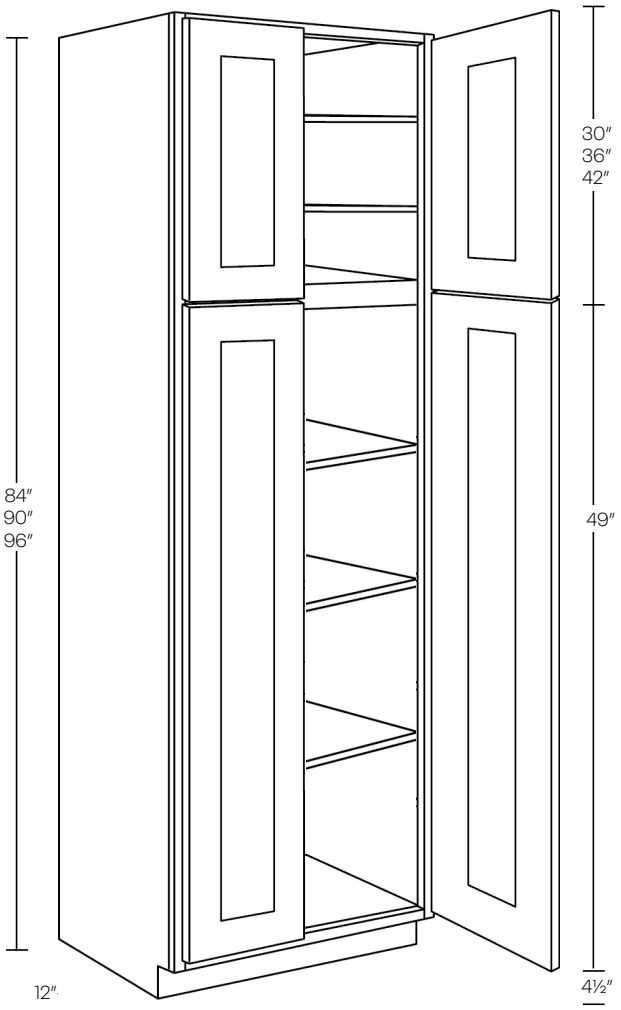

Item Number	A	B	C
UC2412X84	2068	2194	2317
UC2412X90	2275	2412	2549
UC2412X96*	2502	2653	2802
UC2424X84	2344	2486	2625
UC2424X90	2580	2735	2890
UC2424X96*	2838	3008	3178
UC3024X84	2478	2734	2889
UC3024X90	2839	3009	3180
UC3024X96*	3119	3307	3494
POS24-3 (factory installed)	989	989	989
POS24-4 (factory installed)	1253	1253	1253
POS30-3 (factory installed)	1062	1062	1062
POS30-4 (factory installed)	1349	1349	1349

- POS price is addition to cabinet list price
- POS uses dovetail construction
- POS has natural finish
- 4 bottom adjustable shelves
- POS only available in 24″ deep

*84″ and 90″ have 2 upper shelves
* 96″ has 3 upper shelves

Pull Out Shelf

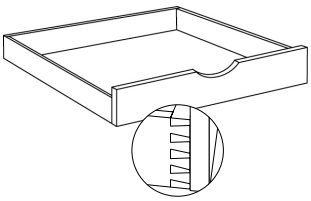

Single Oven Cabinet

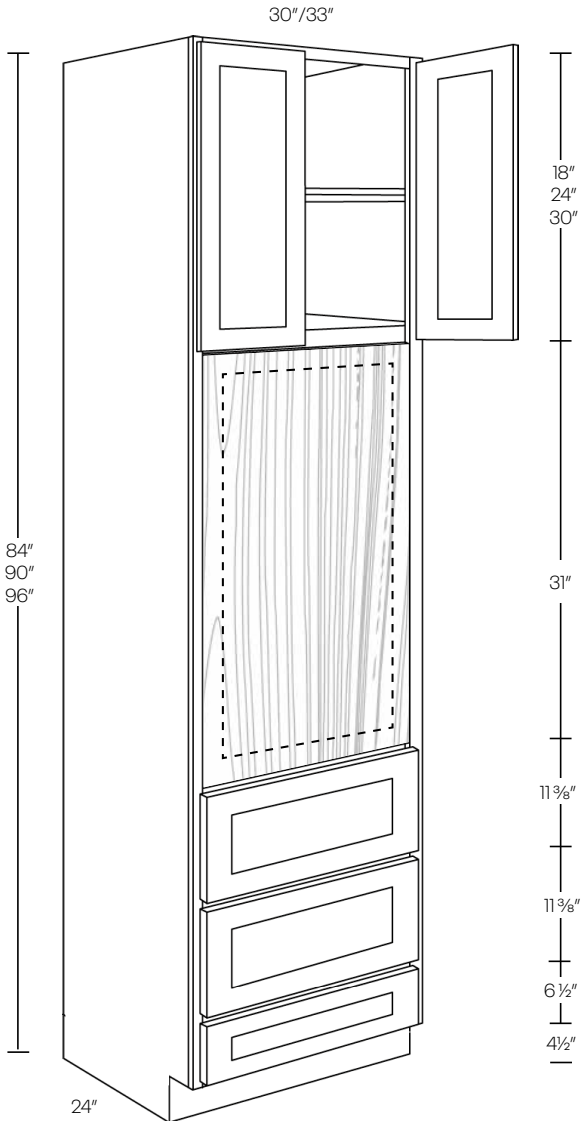

Item Number	A	B	C
OV3084	2397	2541	2685
OV3090	2547	2701	2852
OV3096*	2694	2855	3017
OV3384	2493	2643	2792
OV3390	2648	2807	2967
OV3396**	2801	2970	3138

- Trimming to be done in field
- 84″ and 90″ has 1 upper shelves
- 96″ has 2 upper shelves
- Remove drawers and floor as needed
- Center panel included

*Maximum cut out width is 27″ wide on 30″
**Maximum cut out width is 30″ wide on 33″

Double Oven Cabinet

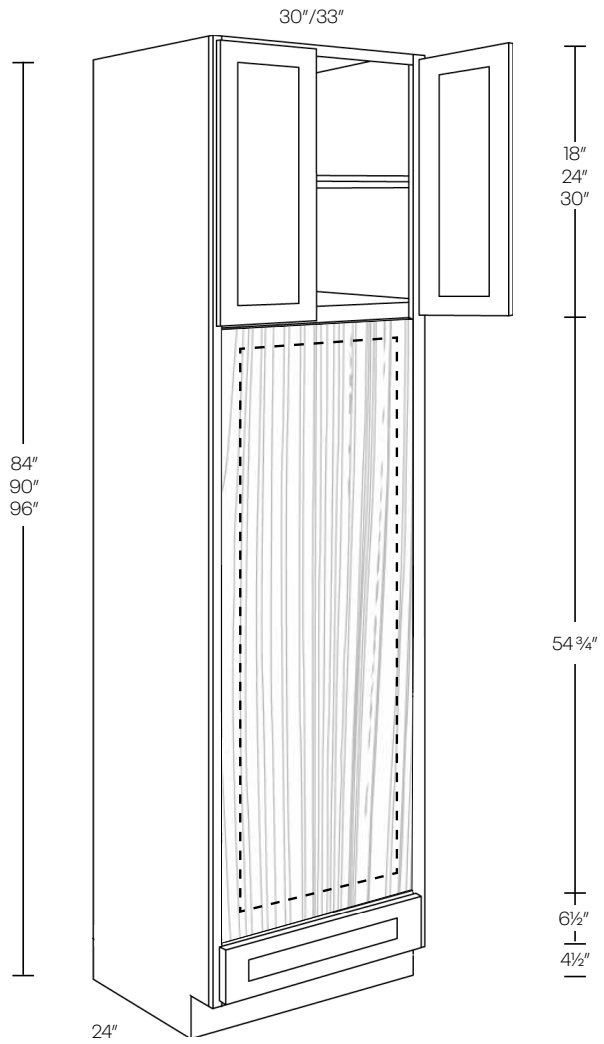

Item Number	A	B	C
OVD3084	2397	2541	2685
OVD3090	2547	2701	2852
OVD3096*	2694	2855	3017
OVD3384	2493	2643	2792
OVD3390	2648	2807	2967
OVD3396*	2801	2970	3138

- Trimming to be done in field
- 84″ ad 90″ has 1 upper shelves
- 96″ has 2 upper shelves
- Center panel included

*Maximum cut out width is 27″ wide on 30″
**Maximum cut out width is 30″ wide on 33″

	Item Number	A	B	C
Top Of Counter Cabinet	**WD1818**	488	517	546

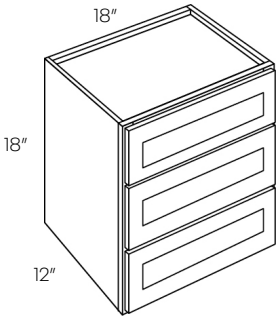

Floating Shelves	**F-SHELF-24**	483	483	483
	F-SHELF-30	576	576	576
	F-SHELF-36	668	668	668
	F-SHELF-42	760	760	760

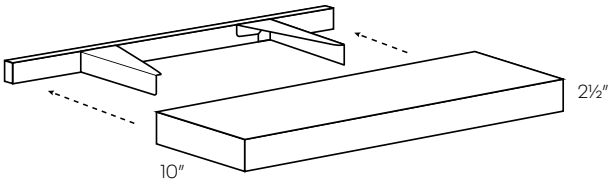

- Can be painted/stained to match any available finish
- Mounting hardware included

Pull Out Shelf	**POS12**	198	198	198
	POS15	207	207	207
	POS18	228	228	228
	POS21	240	240	240
	POS24	271	271	271
	POS27	282	282	282
	POS30	294	294	294
	POS33	307	307	307
	POS36	329	329	329
	POS42	345	345	345

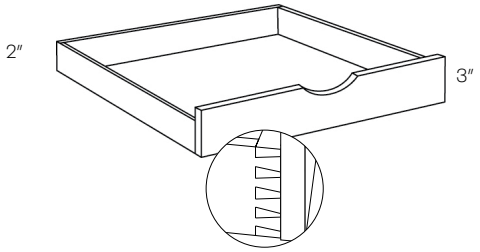

- Ball bearing soft-close glides included
- POS uses dovetail construction with a natural finish
- Natural finish

Wooden Cutlery Divider

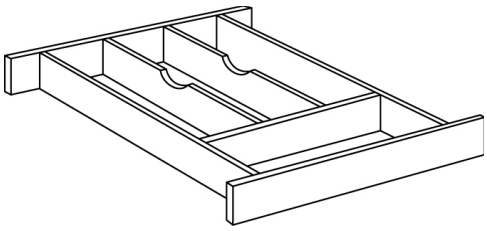

Item Number	A	B	C
WCD-B12	202	202	202
WCD-B15-30	223	223	223
WCD-B18-36	223	223	223
WCD-B21-42	223	223	223
WCD-B24-48	242	242	242
WCD-B27	242	242	242
WCD-B33*	215	215	215
WCD-B39*	215	215	215
WCD-DB30	242	242	242
WCD-DB33*	215	215	215
WCD-DB36*	215	215	215

• To be trimmed on site
* Need to buy 2 pieces

Arched Wood Hood

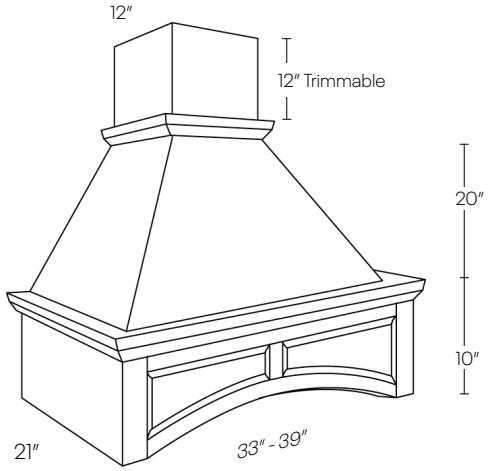

Standard Raised Panel

When purchasing your blower unit, check the requirements for your range or cooktop. Verify the blower will fit into the interior dimensions of the hood.

Item Number	A	B	C
WHA30/33	4403	4403	4403
WHA36/39	4752	4752	4752

- Inside dimensions all 18″ deep by 27½″ - 33½″
- Liners Included
- Blower not available

30″ Hood Liner

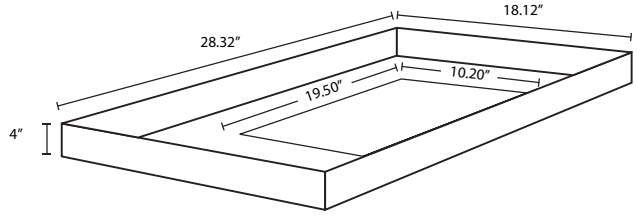

36″ Hood Liner

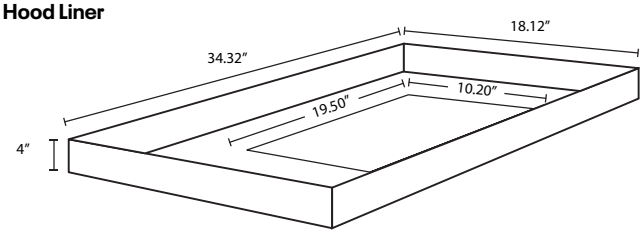

Straight Wood Hood

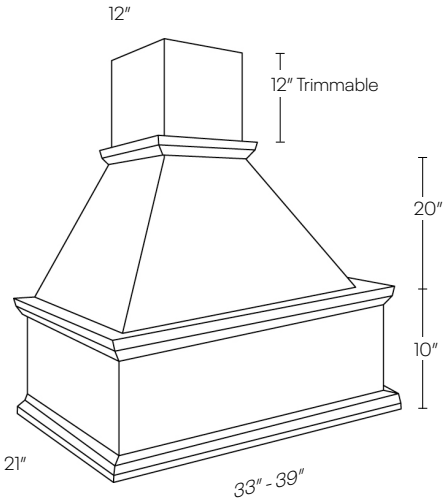

When purchasing your blower unit, check the requirements for your range or cooktop. Verify the blower will fit into the interior dimensions of the hood.

WHP30/33	4403	4403	4403
WHP36/39	4752	4752	4752

- Inside dimensions all 18″ deep by 27½″ - 33½″
- Liners Included
- Blower not available

30″ Hood Liner

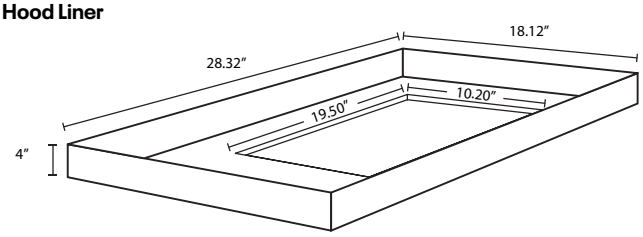

36″ Hood Liner

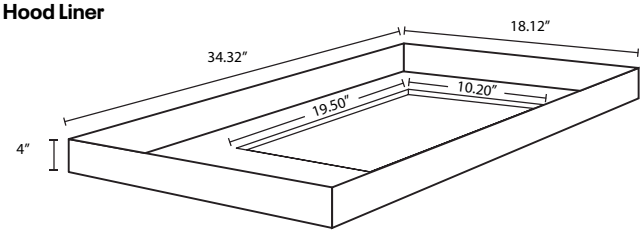

Valance Wood Hood

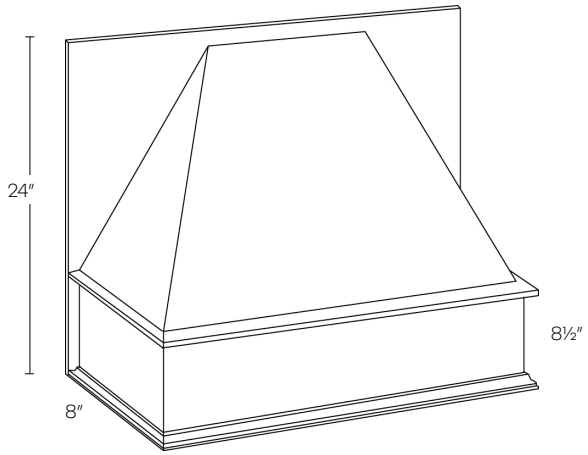

Item Number	A	B	C
WHV30	1276	1276	1276
WHV36	1509	1509	1509

- Blower not available
- Liner not included
- Inside dimensions are 5½″ x 26½″ x 32½″

Mantle Hood

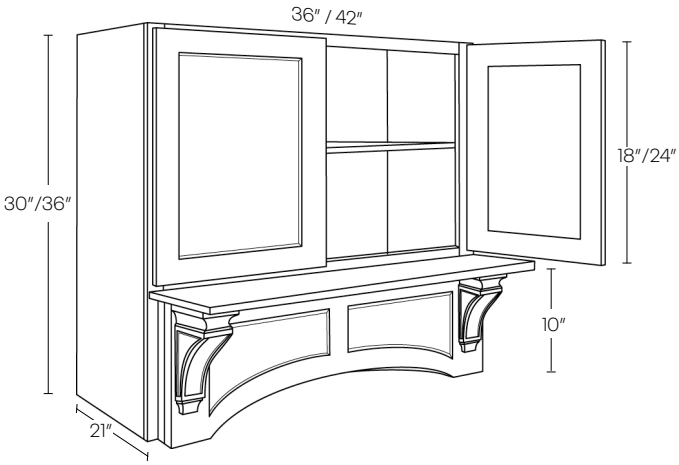

WACC3630X21	4339	4339	4339
WACC4230X21	4683	4683	4683
WACC3636X21	4470	4470	4470
WACC4236X21	4815	4815	4815
WHACC3630X21	4339	4339	4339
WHACC4230X21	4683	4683	4683
WHACC3636X21	4470	4470	4470
WHACC4236X21	4815	4815	4815

- Inside dimensions are 20¼″ deep by 34¼″/401/4″/461/4″
- Blower not available
- Liner not included

WHACC

Double Door Vanity Sink Base Cabinet

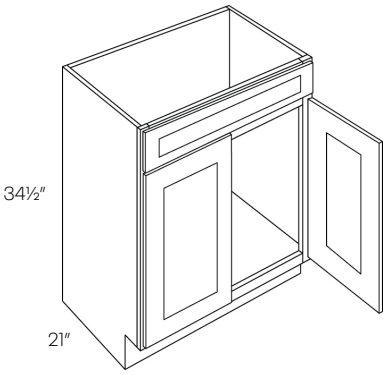

Item Number	A	B	C
V24	718	761	805
V30	814	864	913
V36	900	954	1008

1 Door 2 Drawer Vanity Sink Base Cabinet

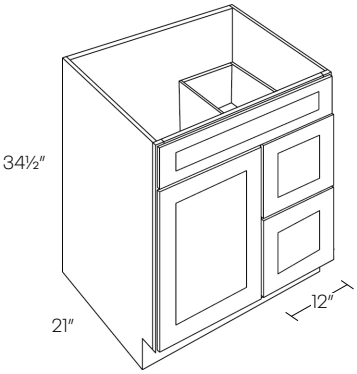

V30DL	1146	1216	1286
V30DR	1146	1216	1286

• Right Drawer Shown

2 Door 2 Drawer Vanity Sink Base Cabinet

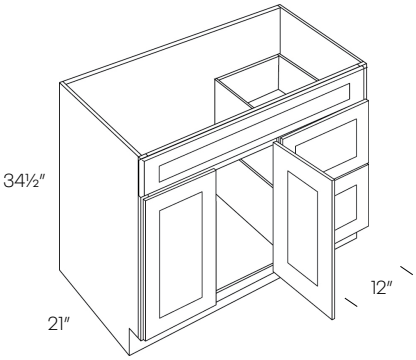

V36DL	1178	1247	1318
V36DR	1178	1247	1318
V42DL	1317	1397	1476
V42DR	1317	1397	1476

• Right Drawer Shown

	Item Number	A	B	C
Double Door & Drawer Vanity Sink Base Cabinet	**V48DD**	1434	1520	1606

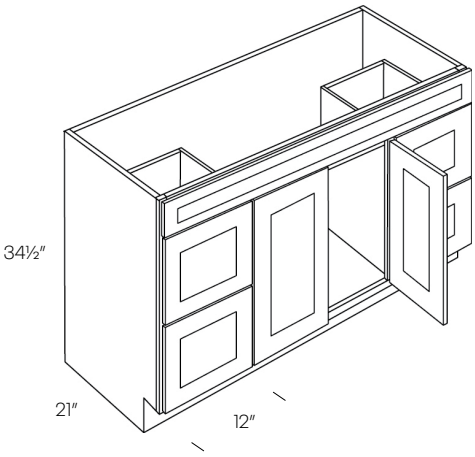

Vanity Drawer Base Cabinet	**VDB12**	907	939	1028
	VDB15	947	1003	1060
	VDB18	968	1026	1084

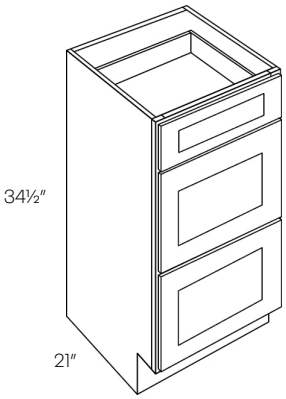

Desk Cabinet	**DDC18x21**	969	1026	1084
	DDC18x24	1075	1140	1208

• Does not hold files

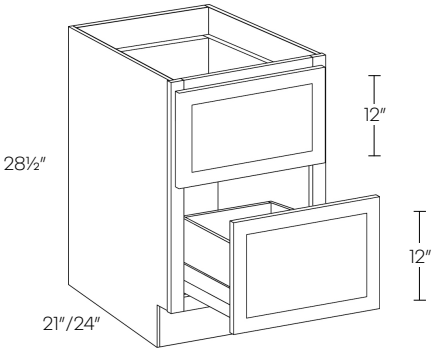

Desk Drawer

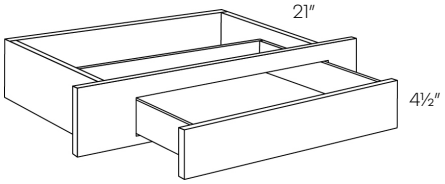

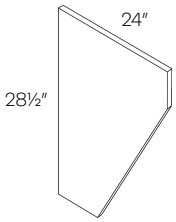

Item Number	A	B	C
DD30	319	338	357
DS	203	203	203

- 2 ½″ trimmable sides
- Drawer front is 22 ½″ wide
- Slab drawer front

Filler

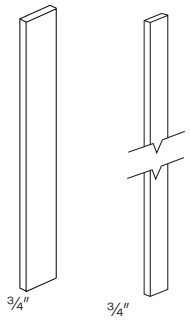

F330/F630/ F342/F642 F396/F696

Item Number	A	B	C
F330	52	52	52
F630	89	89	89
F342	68	68	8
F642	120	120	120
F396	160	160	160
F696	265	265	265

• Fillers finished on all 4 sides

Refrigerator End Panel

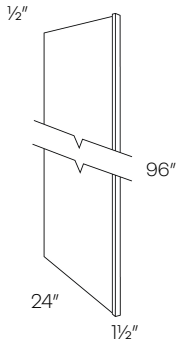

REP1

Item Number	A	B	C
REP196	518	518	518
REP384	470	470	470
REP390	494	494	494
REP396	518	518	518
UREP24	361	361	361
UREP30	480	480	480
UREP24-9	406	406	406
UREP30-9	540	540	540
UREP24-10	457	457	457
UREP30-10	608	608	608

• Edgebanded on one side
• REP196 only available in the White finish

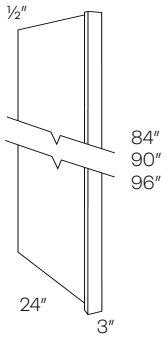

REP3

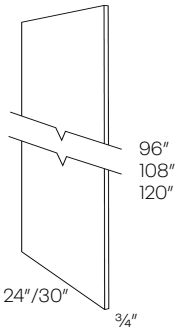

UREP

Dishwasher Return Panel

DWR3	272	272	272
DWR6	302	302	302
BEP	238	238	238

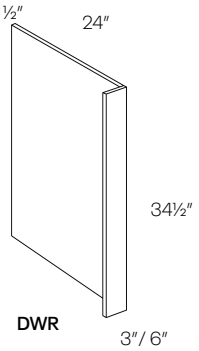

DWR

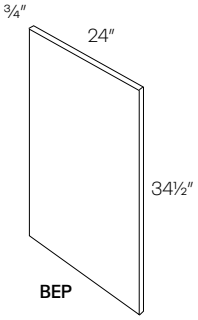

BEP

Plywood Panel

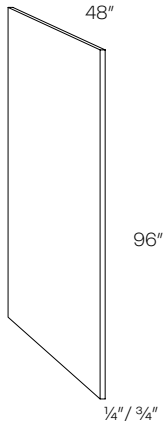

PLY4X8	410	410	410
PLY4x8-¾*	1323	1323	1323

* Special order

Crown Moldings

CRM	141	141	141
CRMS	141	141	141

• 8 Feet long

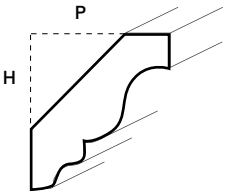

CRM
Height: 2″
Projection: 2″

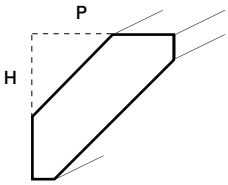

CRMS
Height: 2″
Projection: 2″

Full Overlay Crown Moldings

Item Number	A	B	C
MFLOCR			

• 8 Feet long

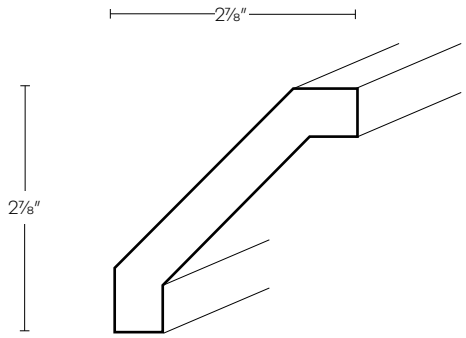

Light Rail Molding

Item Number	A	B	C
LTRM	275	275	275
LTRMS	275	275	275
LTRM1	207	207	207

• 8 Feet long

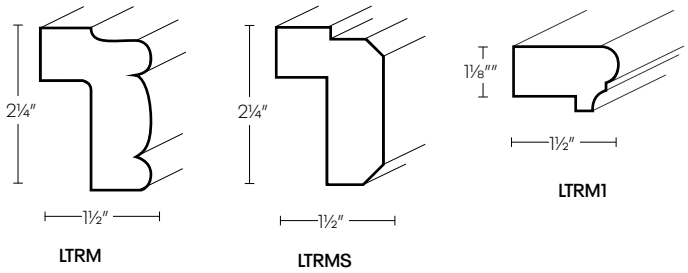

Royal Crown Molding

Item Number	A	B	C
RCRM	397	397	397
RCRMS	397	397	397
RCRMC	397	397	397

• 8 Feet long

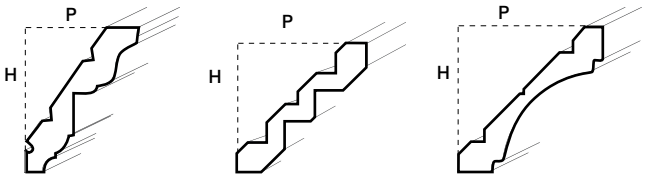

RCRM
Height: 3½″
Projection: 2½″

RCRMS
Height: 3⅛″
Projection: 3⅛″

RCRMC
Height: 3⅛″
Projection: 3⅛″

Shoe Molding

Item Number	A	B	C
SHM	119	119	119

• 8 Feet long

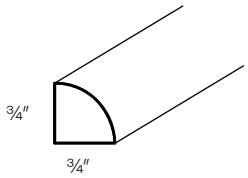

Column

Item Number	A	B	C
CLM-B30 (34½″H X 30″D)	451	451	451
CLM-30X15 (30″H X 15″D)	228	228	228
CLM-36X15 (36″H X 15″D)	255	255	255
CLM-42X15 (42″H X 15″D)	283	283	283

• Trimmable
• Finished 3 sides

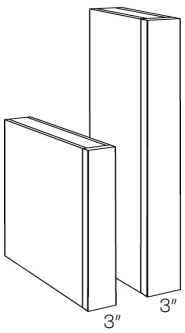

Trim Molding

Item Number	A	B	C
TBMS	130	130	130

• 8 Feet long

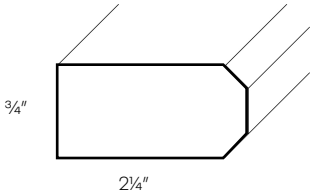

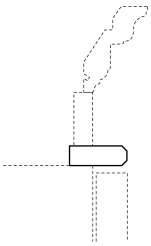

*Suggested use

Corner Molding

Item Number	A	B	C
OCM	107	107	107
OCM-135	107	107	107
ICM	107	107	107

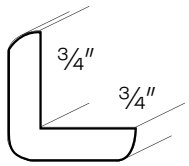

OCM

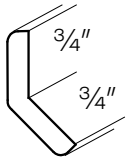

OCM135

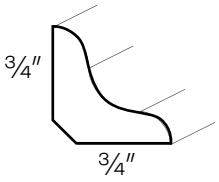

ICM

Toe Kick

Item Number	A	B	C
TKS	89	89	89

• 8 Feet long

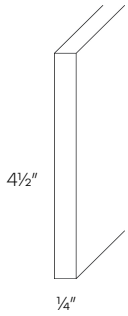

Scribe Molding

SCM	87	87	87

• 8 Feet long

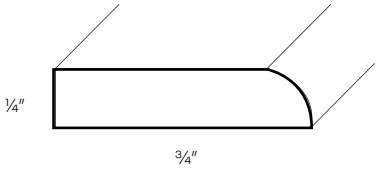

Base Molding

BSMS	283	283	283

• 8 Feet long

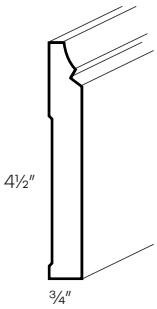

Finished Skin

FS30	107	107	107
FS42	149	149	149
FS9624	283	283	283
FSB	139	139	139
FSV	138	138	138

• ¼″ Thick

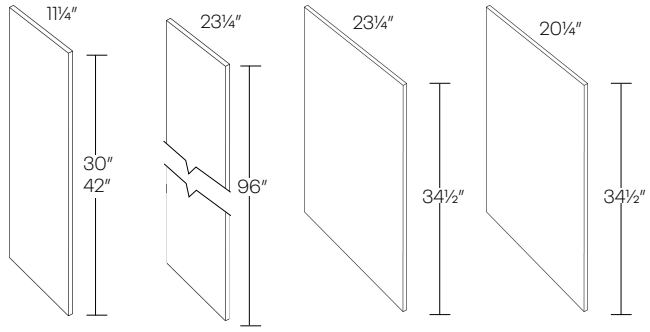

FS30/FS42 FS9624 FSB FSV

Arched Valance

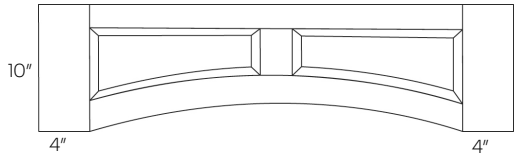

VALPR - Raised panel

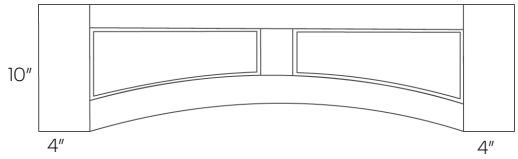

VALP - Flat panel

Item Number	A	B	C
VALP-36	238	238	238
VALP-42	264	264	264
VALP-48	300	300	300
VALP-60	353	353	353
VALPR-36	238	238	238
VALPR-42	264	264	264
VALPR-48	300	300	300
VALPR-60	353	353	353

• 2″ Trimmable on both sides

Post

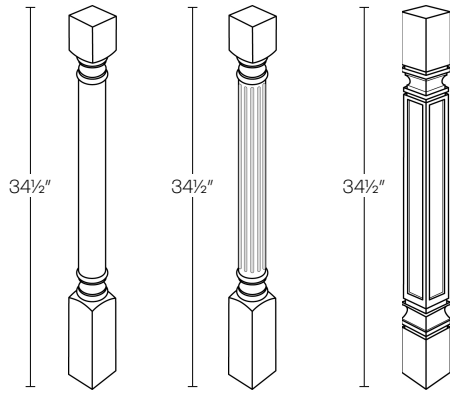

Plain **Fluted** **Square**

POST-P	683	683	683
POST-F	735	735	735
POST-S	1103	1103	1103

• 3″ X 3″

Large Post

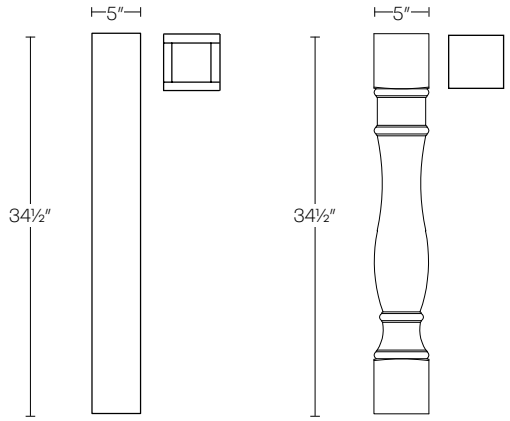

POST5-C **POST5-R**

POST5-C	887	887	887
POST5-R	992	992	992

• 5″ X 5″

Corner Post

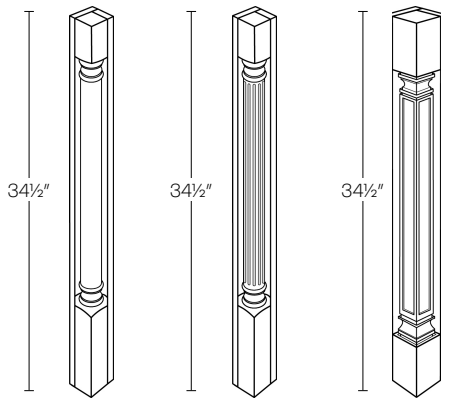

Plain Fluted Square

Item Number	A	B	C
POST-P-CR	392	392	392
POST-F-CR	392	392	392
POST-S-CR	392	392	392

• 3″ X 3″

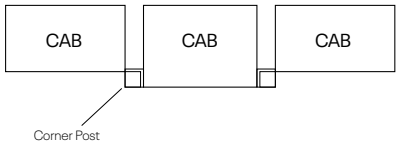

Spindle

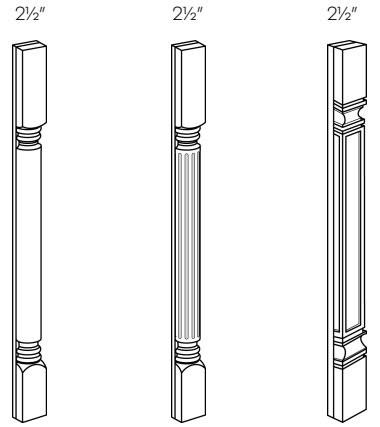

Plain Fluted Square

SPIN-P-30	203	203	203
SPIN-P-36	259	259	259
SPIN-P-42	300	300	300
SPIN-F-30	203	203	203
SPIN-F-36	259	259	259
SPIN-F-42	300	300	300
SPIN-S-30	203	203	203
SPIN-S-36	259	259	259
SPIN-S-42	300	300	300

• To be applied on top of filler (not included)

Bun Feet

BUN-P	111	111	111
BUN-F	116	116	116

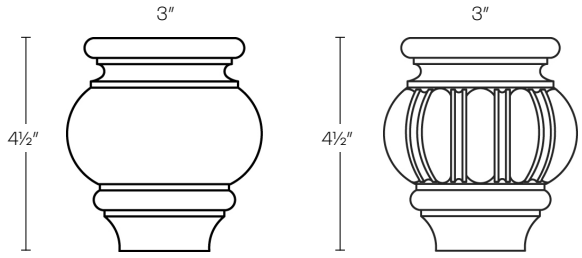

Plain Fluted

Corbel

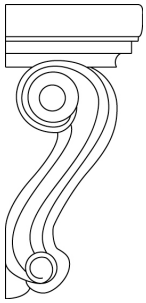

CBO

CBM

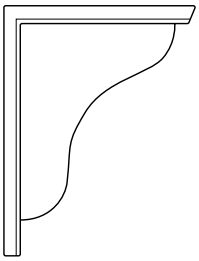

CBS

Item Number	A	B	C
CBO6	382	382	382
CBO9	430	430	430
CBO13	512	512	512
CBM6	382	382	382
CBM9	430	430	430
CBS6	100	100	100
CBS10	139	139	139
CBM13	512	512	512

	W	D	H
CBO6	3″	3⅝″	6″
CBO9	4¾″	3⅝″	9″
CBO13	4¾″	6″	13″
CBM6	3″	3½″	6″
CBM9	4½″	4½″	9″
CBS6	3″	3½″	6½″
CBS10	3″	7½″	10½″
CBM13	4½″	6″	13″

Decorative End

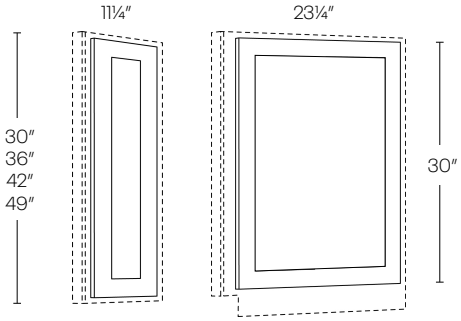

WDE12 BDE24

WDE1230	175	185	197
WDE1236	249	264	279
WDE1242	292	310	329
WDE1250	361	383	405
BDE24	420	446	471

• Use finished skin to flush with frame, see page 117

Item Number	A	B	C
Custom Decorative Panel*	--	--	--

Refrigerator Door

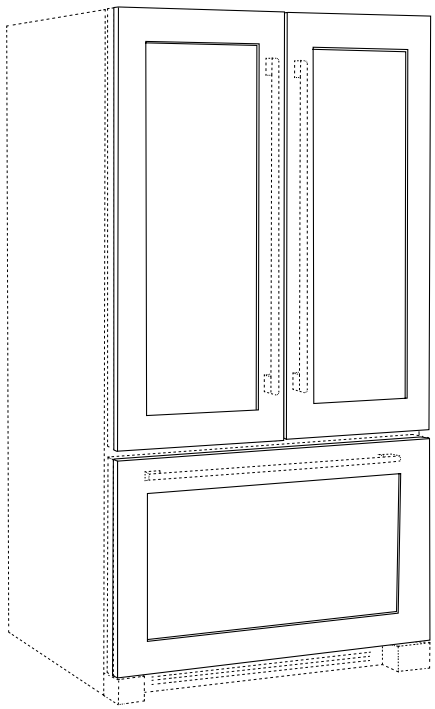

• Customer must provide drawings and dimensions for custom price quote and lead time
• Can not be combined with existing quote
• Custom Decorative Panels will have an extended lead time

* Doors are made custom, please provide accurate drawings with your order

Touch Up Kit

TUP	100	100	100
TUP-STN	118	118	118

• TUP-STN is not available in the Stone finish

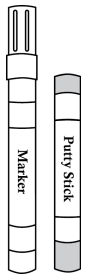

TUP

TUP-STN

Cabinet & Door Information

Classic Collection

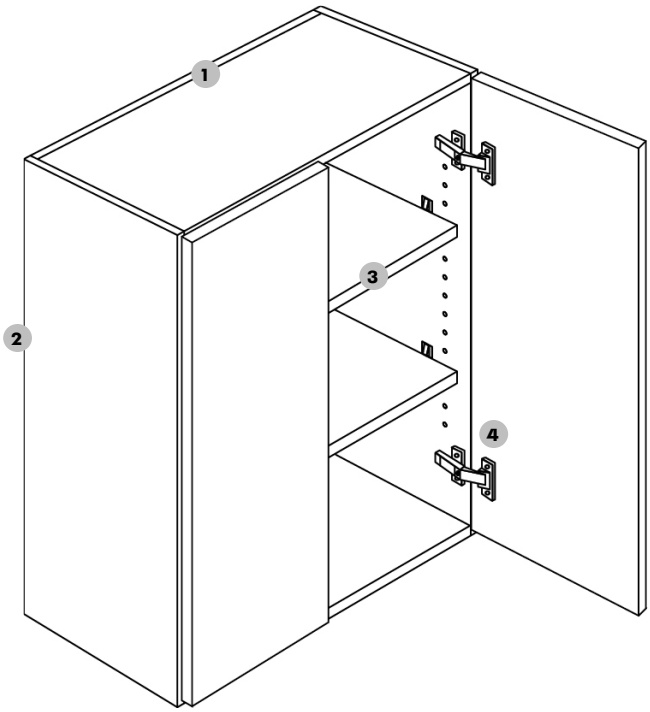

1. **Back panel** — 1/4″ back panel with 3/4″ x 4″ supporting braces top and bottom, constructed with wood dowels glued and clamped for ensured security.
2. **End panel** — ¾″ thick, multi-core plywood sides Constructed with wood dowels glued and clamped for ensured security.
3. **Shelves** — ¾″ thick, plywood; fully adjustable
4. **Hinges** — Heavy duty steel concealed hinge, adjustable with soft-close mechanism

*36″ and 42″ Wall cabinets will have 3 hinges

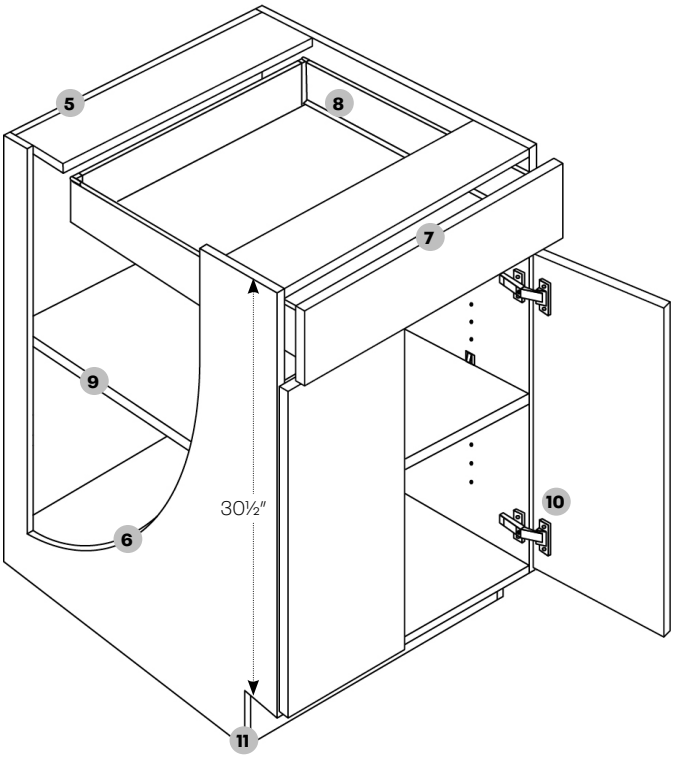

5. **Back panel** — ¼″ back panel with ¾″x 4″ supporting braces top and bottom, constructed with wood dowels glued and clamped.
6. **End panel** — ¾″ thick, multi-core plywood sides Constructed with wood dowels glued and clamped.
7. **Drawers** — Double white wall metal drawer with ½″ plywood bottom.
8. **Glides** — Full extension glides, with soft closing feature.
9. **Shelves** — ¾″ thick, full depth plywood; fully adjustable.
10. **Hinges** — Heavy duty steel concealed hinge, adjustable with soft-close mechanism
11. **Toe Kick** — 4″ Toe kick with 3″ inset on all standard base and vanity cabinets. White toe kick is standard.

Cabinet boxes are white edge banded with white interior and exterior.

On diagonal and corner cabinets,matching edgebanding will be applied vertically

Classic cabinets are only available assembled.

Alvic doors come standard with Blum hinges.

Matrix

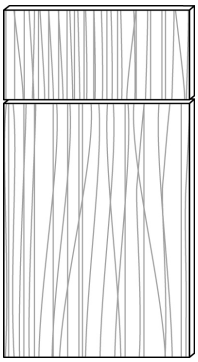

Finish	Price Code
M18 - Silver	E
M19 - Greystone	E

A full overlay low pressure laminate flat panel MDF door, with a deep textured finish.

- **Exposed ends need finished sides (Factory Installed)**

Milano

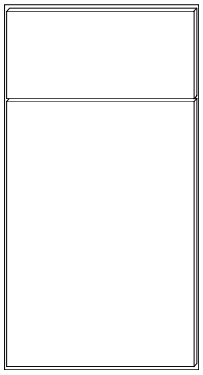

Finish	Price Code
M40 - Polar White (gloss)	F
M41 - Fossil Grey (gloss)	F
M42 - Seaside (matte) *coming soon	F
M43 - Sand (matte) *coming soon	F

A full overlay slab door made from a MDF core, wrapped in PET with a matching edgeband.

PET (Polyethylene Terephthalate) materials are extrememly durable, resistant to heat and moisture, and highly resistant to warping.

- **Exposed ends need finished sides (Factory Installed)**

Alvic Doors

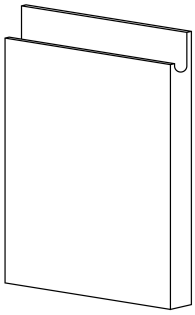

Finger-Pull

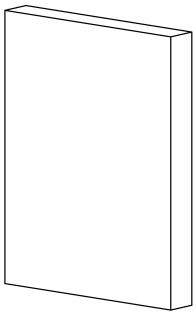

Slab

Finish	Price Code
Syncron	**H**
Luxe / Zenit	**I**

- Finger-Pull is 25% Up-charged
- Panels cannot exceed 107″
- Only available with Classic Collection box

Alvic doors come with a color matching postforming edge band. The finger pull doors are made 22mm thick and the slab doors are 18mm thick.

*Alvic Doors come standard equipped with Blum hinges

- **Exposed ends need ¾″ finished panels (Not Factory Installed)**
- **Finger Pull only available on doors and drawers that are 47.5″ or less**
- **All full height doors will be 20% higher**

Specifications and Prices

Classic Collection

12″ - 15″ High Wall Cabinet

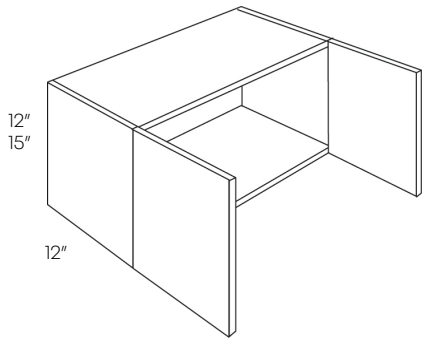

Item Number	E	F	H	I
3012	399	419	500	560
3312	424	446	530	595
3612	462	486	577	647
2415	407	428	508	569
3015	415	436	518	580
3315	437	459	546	611
3615	462	486	577	647

• No shelf

18″ High Wall Cabinet

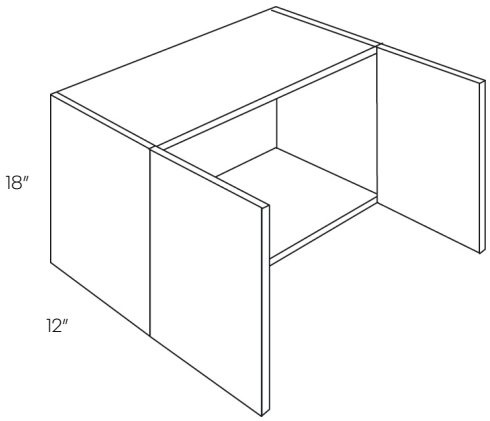

2118 (1 door)	384	404	479	538
2418	419	440	524	647
3018	462	486	577	587
3318	509	535	635	646
3618	559	587	698	711

• No shelf

24″ High Wall Cabinet

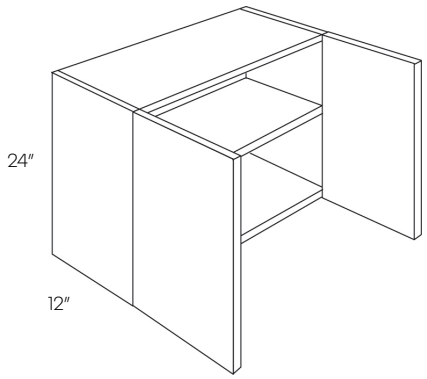

2424	574	603	717	804
2724	579	608	725	811
3024	599	629	750	846
3324	620	651	773	867
3624	664	698	831	930
4224	746	784	932	1045

• No center brace

Horizontal Wall Cabinet

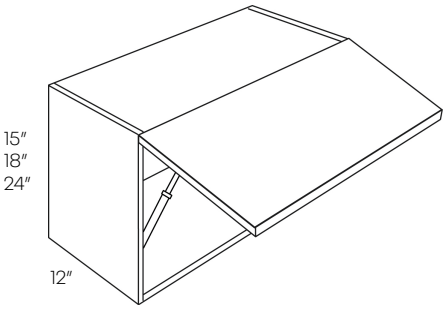

Item Number	E	F	H	I
3015-HD	680	714	849	951
3018-HD	684	719	854	958
3615-HD	846	889	577	1185
3618-HD	857	900	1076	1203
3024-HD*	786	826	983	1101

* Has shelf

24″ Deep Wall Cabinet

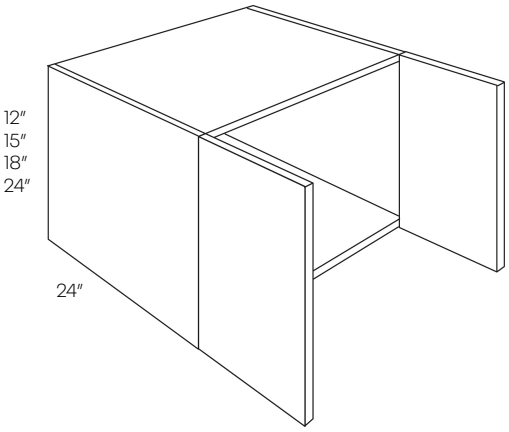

3012X24	541	569	677	758
3015X24	561	590	702	786
3018X24	583	613	729	816
3024X24*	781	821	975	1092
3312X24	551	579	688	770
3315X24	574	603	717	804
3318X24	596	626	744	833
3324X24*	835	877	1045	1169
3612X24	597	627	745	834
3615X24	623	655	780	871
3618X24	702	738	877	983
3624X24*	899	944	1124	1258

* Has shelf

	Item Number	E	F	H	I
30″ High 1 Door Wall Cabinet	**930**	331	348	414	464
	1230	369	388	462	517
	1530	395	415	494	554
	1830	446	469	557	624
	2130	532	559	665	745

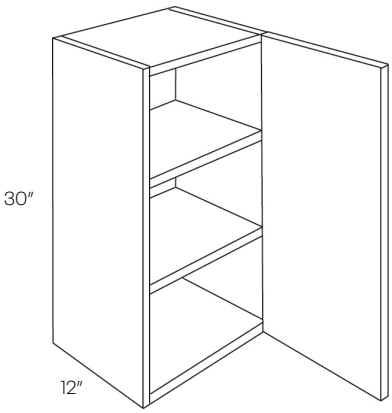

30″ High 2 Door Wall Cabinet	**2430**	571	600	712	797
	2730	627	659	785	878
	3030	640	672	801	897
	3330	701	737	876	980
	3630	743	781	929	1039
	3930	805	846	1004	1127
	4230	852	895	1064	1193

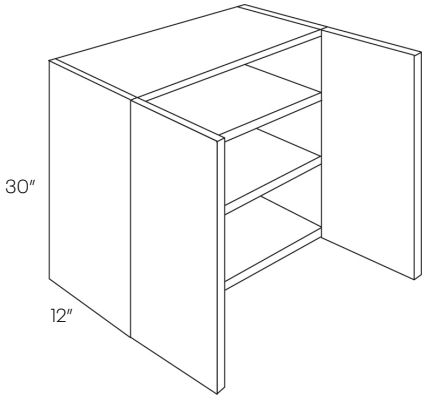

30″ High Blind Wall Cabinet	**BLW27/3030 (1 door)**	810	851	1013	1134
	BLW36/3930 (1 door)	969	1018	1212	1355
	BLW39/4230	1058	1111	1322	1481
	BLW42/4530	1164	1223	1455	1628

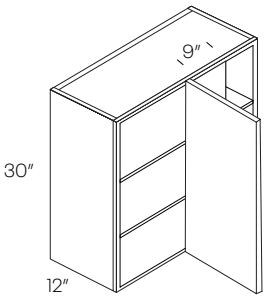

BLW27/BLW36

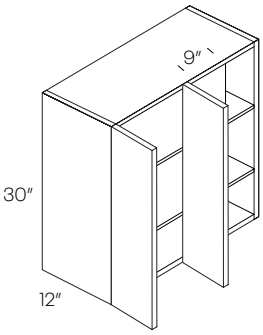

BLW39/BLW42

Cabinet	Min. Pull	Max. Pull	Actual Size	Door	Door Opening
BLW27/3030	27″	30″	27″	1230	11.25″ X 28.5″
BLW36/3930	36″	39″	36″	2130	20.25″ X 28.5″
BLW39/4230	39″	42″	39″	2430	23.25″ X 28.5″
BLW42/4530	42″	45″	42″	2730	26.25″ X 28.5″

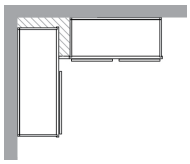

• Can be installed at actual size

	Item Number	E	F	H	I
30″ High Diagonal Corner Wall Cabinet	**CW2430**	830	872	1037	1161

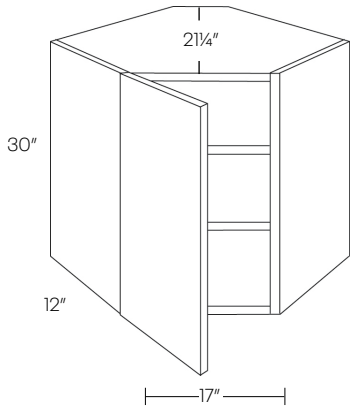

- Requires 24″ x 24″ wall space
- Matching Edgeband on vertical side

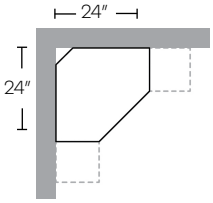

30″ High Square Corner Wall Cabinet	**WSQ2430**	894	939	1118	1252

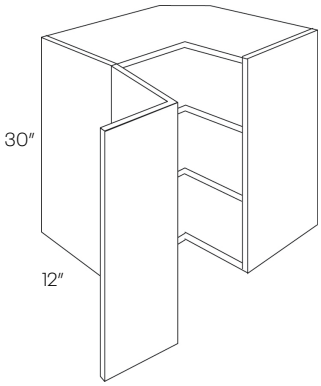

- Requires 24″ x 24″ wall space
- Pie is 12″ x 12″

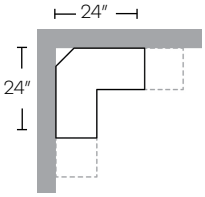

36″ High 1 Door Wall Cabinet

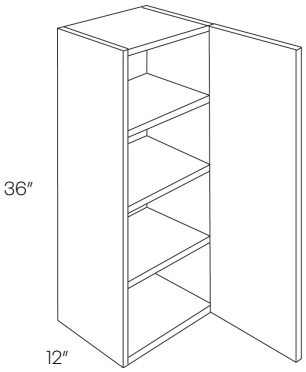

Item Number	E	F	H	I
936	395	415	494	554
1236	437	459	546	611
1536	529	556	661	741
1836	587	617	737	806
2136	638	670	797	893

36″ High 2 Door Wall Cabinet

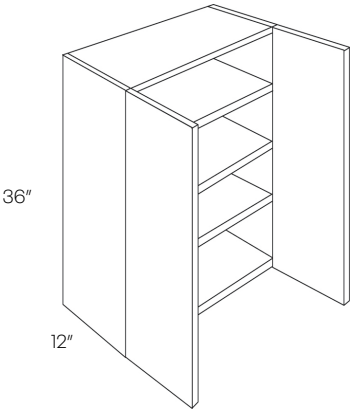

2436	681	716	851	952
2736	753	791	941	1053
3036	772	811	966	1082
3336	835	877	1045	1169
3636	887	932	1107	1241

36″ High Blind Wall Cabinet

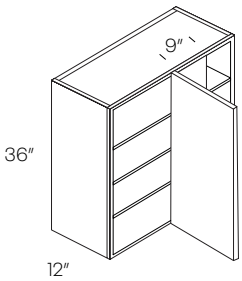

BLW27/BLW36

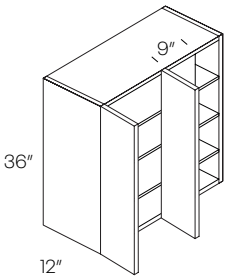

BLW39

BLW27/3036 (1 door)	941	989	1178	1317
BLW36/3936 (1 door)	1124	1181	1404	1572
BLW39/4236	1243	1306	1554	1740

Cabinet	Min. Pull	Max. Pull	Actual Size	Door	Door Opening
BLW27/3036	27″	30″	27″	1236	11.25″ X 34.5″
BLW36/3936	36″	39″	36″	2136	20.25″ X 34.5″
BLW39/4236	39″	42″	39″	2436	23.25″ X 34.5″

• Can be installed at actual size

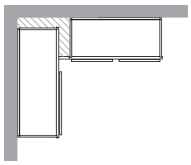

Item Number	E	F	H	I
CW2436	873	917	1091	1221

36″ High Diagonal Corner Wall Cabinet

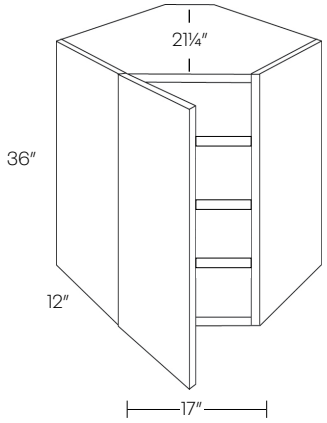

• Requires 24″ x 24″ wall space
•Matching Edgeband on vertical side

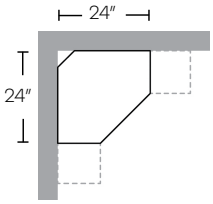

WSQ2436	941	989	1178	1317

36″ High Square Corner Wall Cabinet

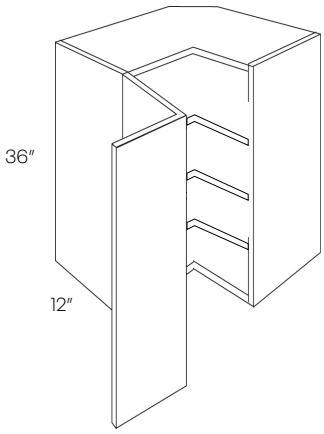

• Requires 24″ x 24″ wall space

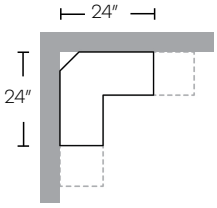

	Item Number	E	F	H	I
42″ High 1 Door Wall Cabinet	**942**	441	464	552	619
	1242	485	510	605	678
	1542	530	557	662	742
	1842	591	621	738	826
	2142	709	745	888	993

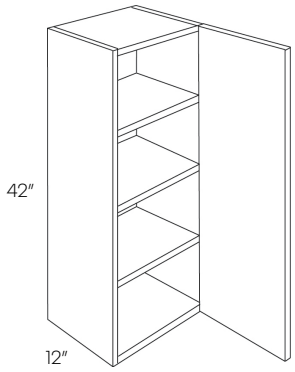

42″ High 2 Door Wall Cabinet	**2442**	758	796	948	1060
	2742	832	874	1039	1165
	3042	864	908	1080	1208
	3342	929	976	1161	1300
	3642	983	1033	1229	1376

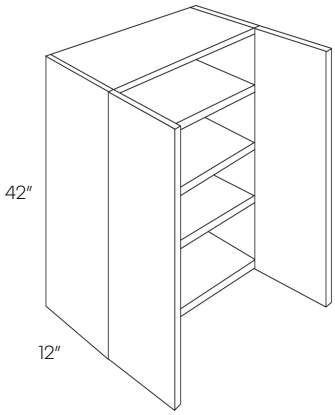

42″ High Blind Wall Cabinet	**BLW27/3042 (1 door)**	1047	1100	1309	1464
	BLW36/3942 (1 door)	1258	1321	1572	1761
	BLW39/4242	1376	1445	1720	1927

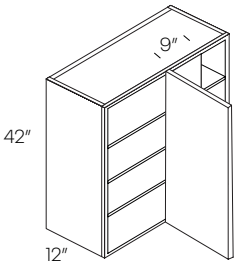

BLW27/BLW36

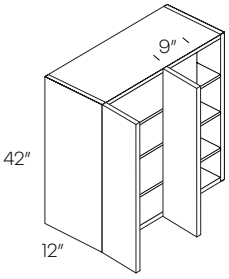

BLW39

Cabinet	Min. Pull	Max. Pull	Actual Size	Door	Door Opening
BLW27/3042	27″	30″	27″	1242	11.25″ X 40.5″
BLW36/3942	36″	39″	36″	2142	20.25″ X 40.5″
BLW39/4242	39″	42″	39″	2442	23.25″ X 40.5″

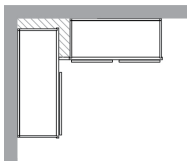

• Can be installed at actual size

Item Number	E	F	H	I
CW2442	998	1048	1220	1289

42″ High Diagonal Corner Wall Cabinet

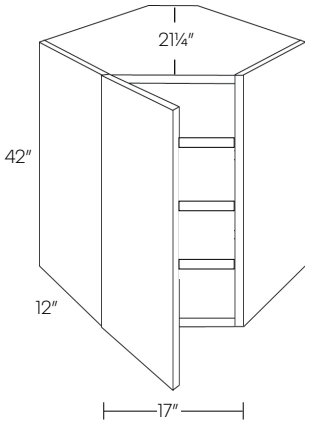

- Requires 24″ x 24″ wall space
- Matching Edgeband on vertical side

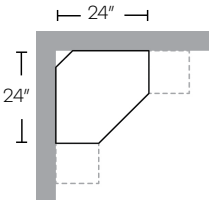

WSQ2442	1166	1225	1458	1632

42″ High Square Corner Wall Cabinet

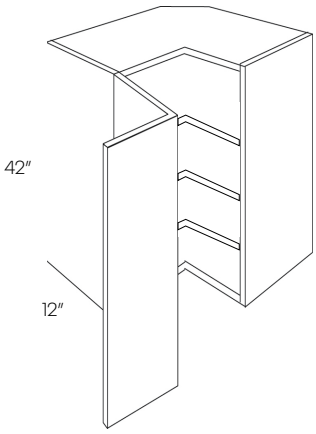

- Requires 24″ x 24″ wall space

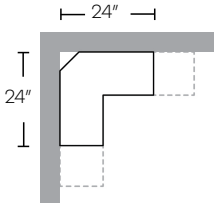

Knick Knack Wall Shelf

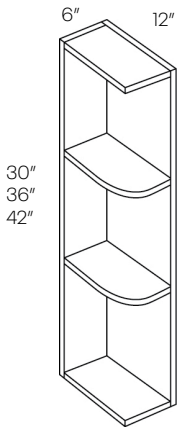

Item Number	E	F	H	I
WS30	223	247	N/A	N/A
WS36	264	292	N/A	N/A
WS42	285	315	N/A	N/A

- Assembled only
- Reversible
- 36″ and 42″ have 3 shelves
- Shelves not adjustable
- Not available in Alvic

Single Door Wall End Cabinet

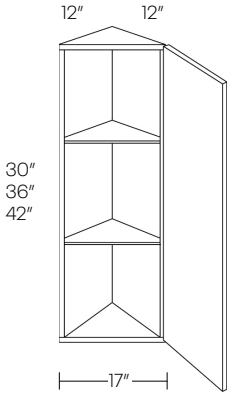

WEC1230	387	407	485	542
WEC1236	437	459	546	611
WEC1242	488	640	608	682

- 36″ and 42″ have 3 shelves
- Matching Edgeband

Double Door Wall End Cabinet

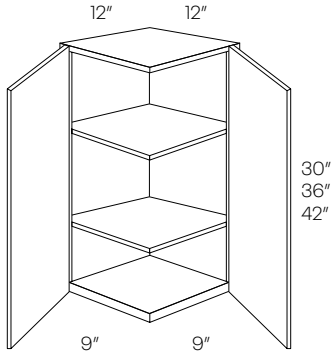

WECD1230	488	513	608	682
WECD1236	546	574	683	765
WECD1242	609	640	762	853

- 36″ and 42″ have 3 shelves

Single Door Base Cabinet

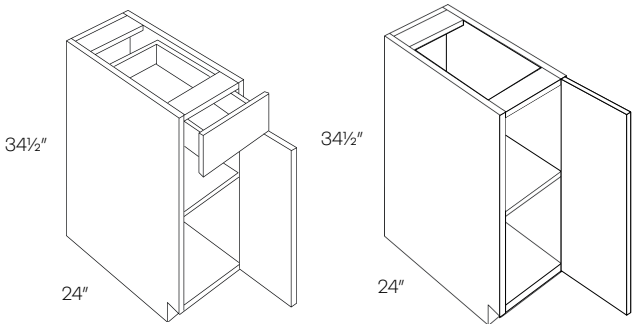

Full Height Door

Item Number	E	F	H	I
B9	528	555	660	739
B12	597	627	745	834
B15	623	655	780	871
B18	657	690	821	918
B21	737	774	920	1032

- Full shelf
- Full height available for same price

1 Drawer 2 Door Base Cabinet

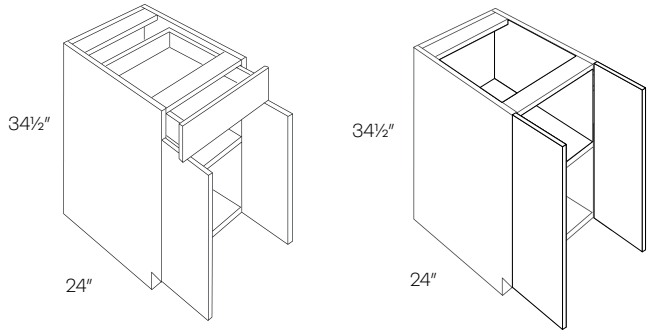

Full Height Door

B24	783	823	978	1095
B27	857	900	1071	1199

- Full shelf
- Full height available for same price

2 Drawer & Door Base Cabinet

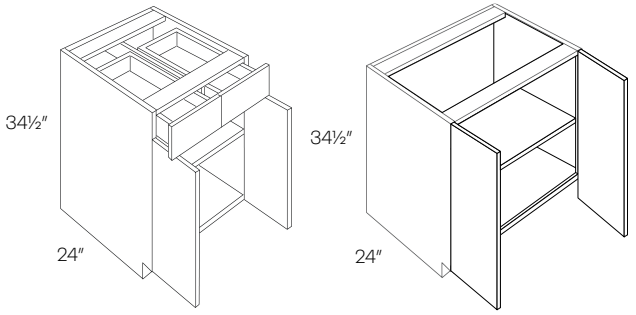

Full Height Door

B30	978	1027	1223	1371
B33	1039	1091	1299	1456
B36	1087	1142	1359	1522
B39	1146	1204	1434	1606
B42	1205	1266	1506	1687

- Full shelf
- Full height available for same price

Single Door Base Cabinet W/1 POS

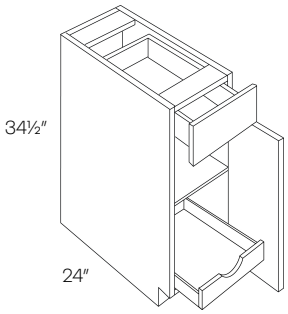

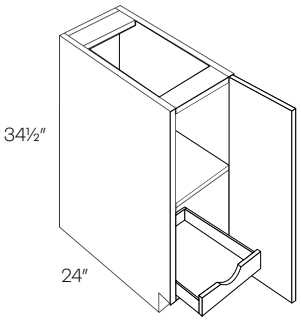

Full Height Door

Item Number	E	F	H	I
B12-POS1	889	934	1110	1244
B15-POS1	922	969	1153	1291
B18-POS1	978	1027	1223	1371
B21-POS1	1082	1137	1352	1515

- Full Shelf
- Ball bearing soft close glides for POS
- Full height available for same price
- POS has natural finish

1 Drawer 2 Door Base Cabinet W/1 POS

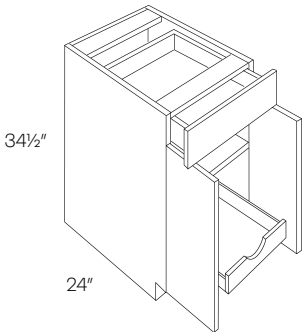

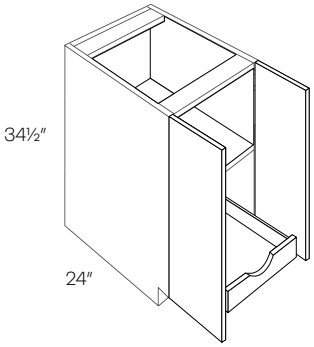

Full Height Door

B24-POS1	1145	1203	1432	1603
B27-POS1	1231	1293	1539	1724

- Full Shelf
- Ball bearing soft close glides for POS
- Full height available for same price
- POS has natural finish

2 Drawer & Door Base Cabinet W/1 POS

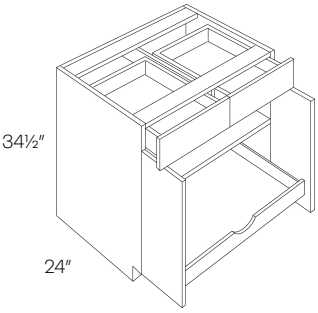

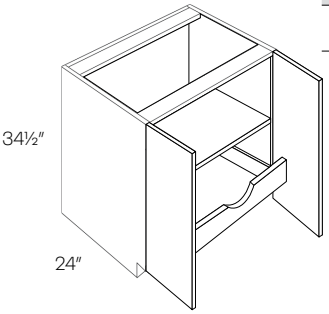

Full Height Door

B30-POS1	1365	1434	1706	1910
B33-POS1	1438	1510	1798	2014
B36-POS1	1507	1583	1884	2110
B42-POS1	1664	1748	1838	2225

- Full Shelf
- Ball bearing soft close glides for POS
- Full height available for same price
- POS has natural finish

Single Door Base Cabinet W/2 POS

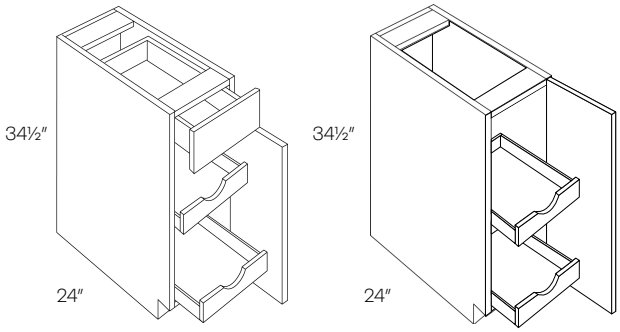

Full Height Door

Item Number	E	F	H	I
B12-POS2	1080	1134	1350	1510
B15-POS2	1121	1178	1401	1569
B18-POS2	1201	1262	1501	1680
B21-POS2	1316	1382	1645	1842

- Ball bearing soft close glides for POS
- Full height available for same price
- POS has natural finish

1 Drawer 2 Door Base Cabinet W/2 POS

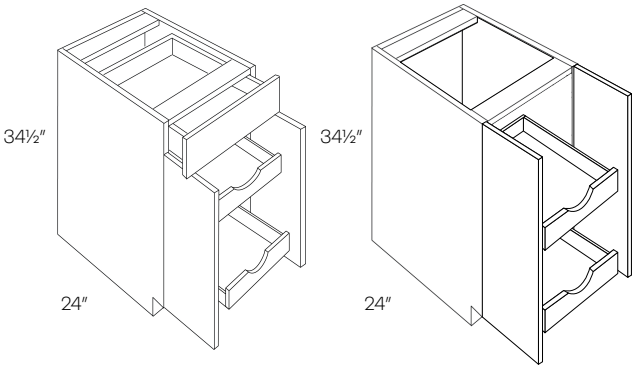

Full Height Door

B24-POS2	1409	1480	1760	1971
B27-POS2	1505	1581	1881	2106

- Ball bearing soft close glides for POS
- Full height available for same price
- POS has natural finish

2 Drawer & Door Base Cabinet W/2 POS

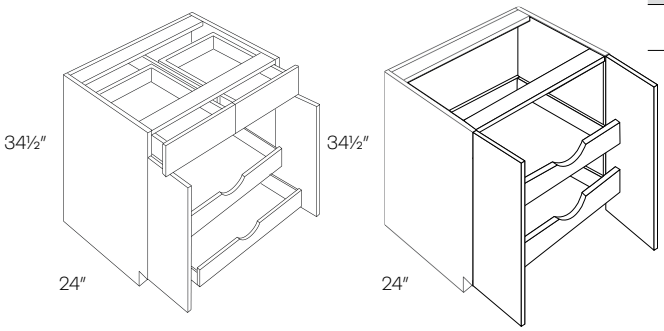

Full Height Door

B30-POS2	1652	1735	2066	2314
B33-POS2	1738	1825	2173	2432
B36-POS2	1826	1918	2283	2557
B42-POS2	2021	2123	2916	2698

- Ball bearing soft close glides for POS
- Full height available for same price
- POS has natural finish

2 Drawer Base Cabinet

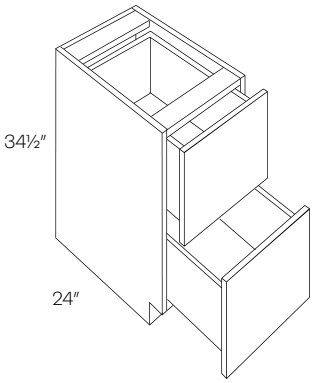

Item Number	E	F	H	I
DB24-2	1077	1131	1347	1507
DB30-2	1166	1225	1458	1632
DB36-2	1305	1371	1632	1826

Blind Base Cabinet

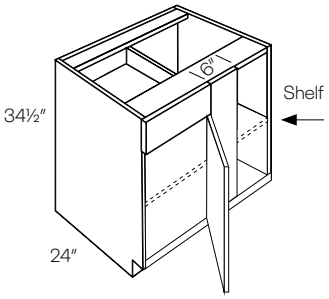

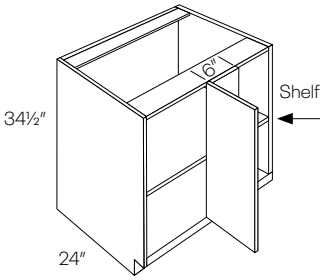

Full Height Door

BLB36/39	1034	1086	1292	1447
BLB39/42	1062	1116	1328	1487
BLB42/45	1138	1195	1423	1593
BLB45/48	1229	1291	1537	1721

- Reversible Left or Right
- Must be pulled to the minimum position

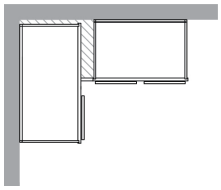

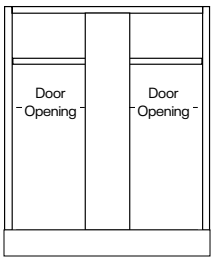

Cabinet	Min. Pull	Max. Pull	Actual Size	Door	Door Opening
BLB36/39	36″	39″	27″	B9	8.25″
BLB39/42	39″	42″	33″	B12	11.25″
BLB42/45	42″	45″	36″	B15	14.25″
BLB45/48	45′	48″	42′	B18	17.25″

3-Drawer Base Cabinet

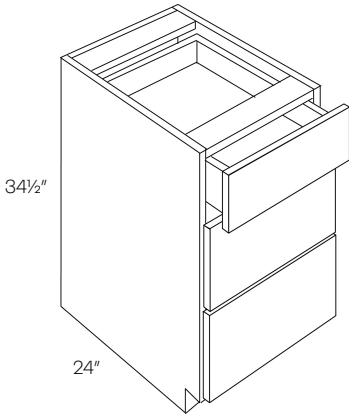

Item Number	E	F	H	I
DB12	943	991	1180	1321
DB15	987	1037	1236	1383
DB18	1008	1059	1262	1412
DB21	1041	1094	1302	1459
DB24	1077	1131	1347	1507
DB27	1130	1187	1412	1582
DB30	1166	1225	1458	1632
DB33	1222	1284	1528	1712
DB36	1305	1371	1632	1826

Diagonal Corner Sink Base Cabinet

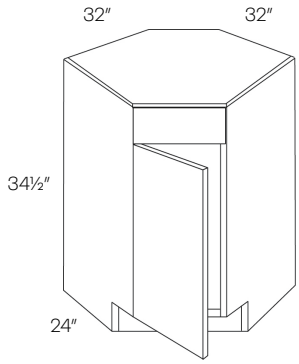

CSB36	1505	1581	1881	2106

- Full height available for same price
- Requires 36″x36″ wall space
- Matching edgebanding will be applied on vertical edge frame

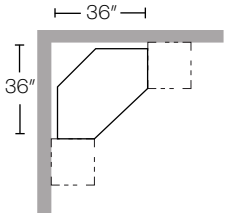

Diagonal Corner Sink Front

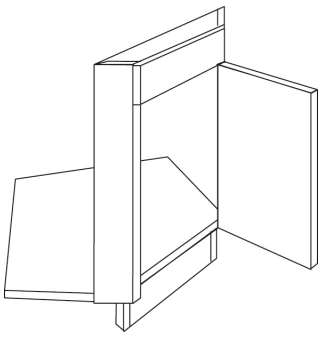

CSF36*	645	678	806	901
CSFFL36 (Floor)	187	197	187	187

*Requires 36″x36″ wall space
*Requires a floor (sold seperately)
- CSF36 ships together with CSFFL36
- For CSF36, matching edgeband will be applied on vertical edge frame

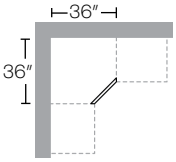

Item Number	E	F	H	I

Easy Reach Corner Base Cabinet

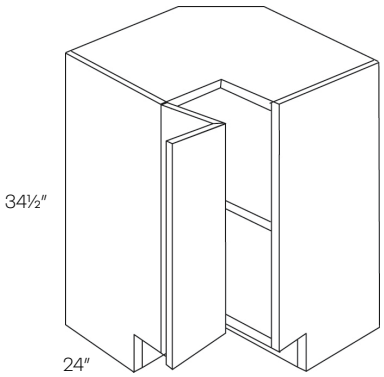

BSQC33R	1347	1415	1682	1884
BSQC33L	1347	1415	1682	1884
BSQC36R	1347	1415	1682	1884
BSQC36L	1347	1415	1682	1884

- Available in left or right hinge
- Left hand shown
- Matching edgeband will be applied on vertical edge frame

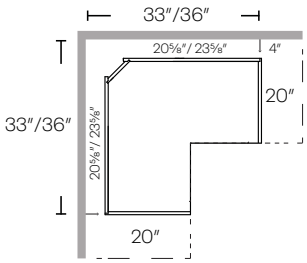

Lazy Susan Corner Base Cabinet

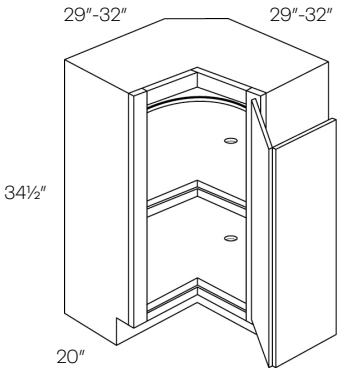

CAR33R	2128	2235	2660	2979
CAR33L	2128	2235	2660	2979
CAR36R	2128	2235	2660	2979
CAR36L	2128	2235	2660	2979

- Requires 33″x33″ / 36″x36″wall space
- Pie cut for 33″ is 9″ for 36″ is 12″
- Available in left or right hinge
- Natural wooden shelf
- Right hand shown
- Matching edgeband will be applied on vertical edge frame

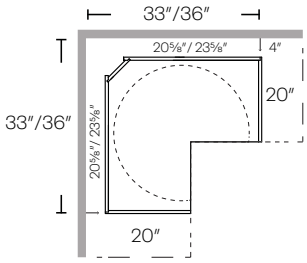

1 Drawer Front 2 Door Sink Base Cabinet

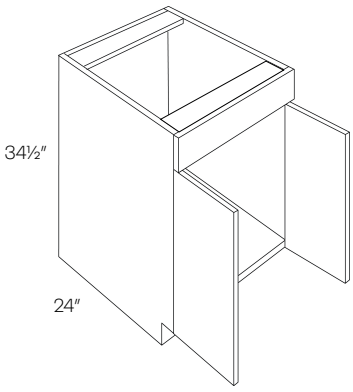

SB24	730	767	913	1022
SB27	786	826	983	1101

2 Drawer Front 2 Door Sink Base Cabinet

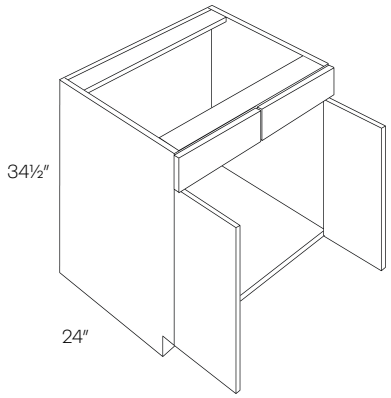

Item Number	E	F	H	I
SB30	833	875	1040	1166
SB33	886	931	1106	1238
SB36	901	947	1128	1263
SB39	928	975	1160	1299
SB42	943	991	1180	1321

2 Door Farm Sink Base Cabinet

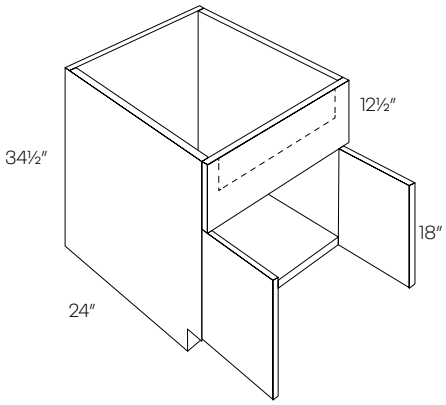

SB30-FS	833	875	N/A	N/A
SB36-FS	901	947	N/A	N/A

- SB30-FS is 27″ wide
- SB36-FS is 33″ wide

Oven & Microwave Base Cabinet

OVB30	833	875	1040	1166
MCB30*	1166	1225	1458	1632

- OV Front opening is 28½″ x 29″
- MC Front opening 28½″ x 17¾″

*Includes finished Interior - Mid 2023

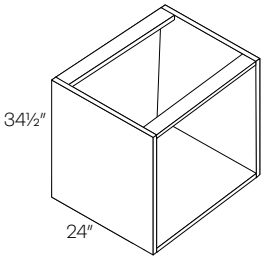

OVB30

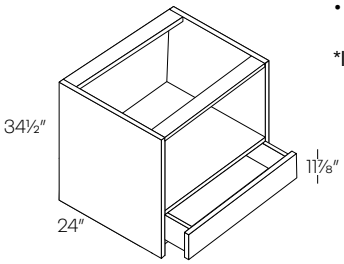

MCB30

Item Number	E	F	H	I
BEC24	755	793	943	1057

Base End Cabinet

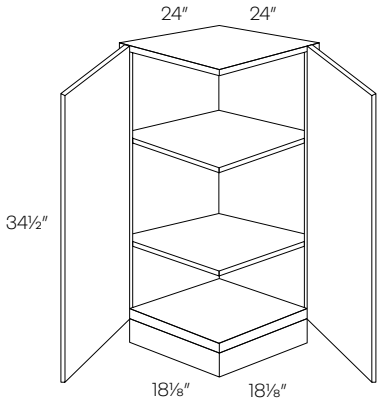

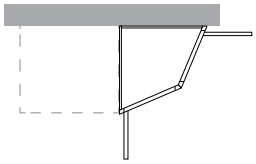

BECS24	755	793	943	1057

Base End Straight Cabinet

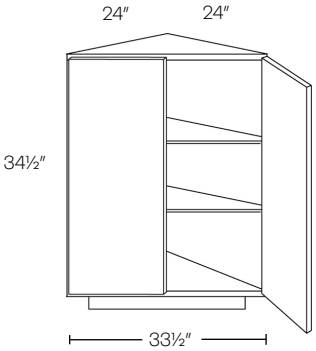

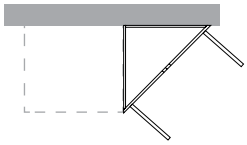

BTC2412	663	697	830	929

Angle Base End Cabinet

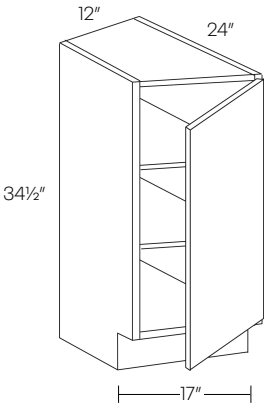

- Reversible
- Loose Toe Kick
- Hinged on 24″

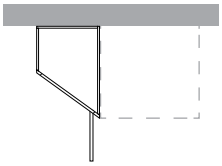

Waste Basket Cabinet

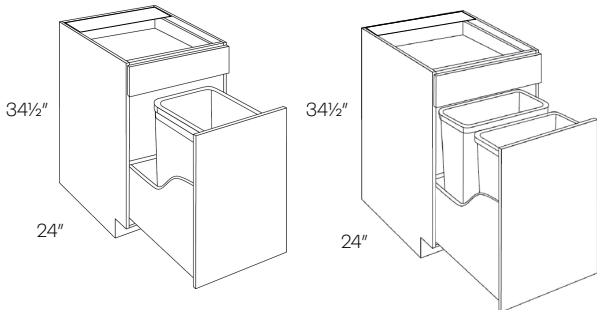

Item Number	E	F	H	I
BWBK15 (1 basket)	1089	1144	1362	1527
BWBK18 (2 basket)	1155	1213	1443	1616

• BWBK15 includes 35qt. waste basket
• BWBK18 includes 2-35qt. waste baskets and soft-close glides
*Full height add 20% for BWBK15/18

Full Height Double Waste Basket Cabinet

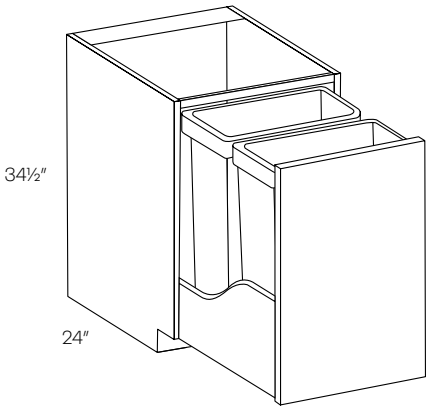

BWBK21-FH	1199	1259	1500	1678

• Includes two 50qt. waste baskets and soft-close glides

Single Door Cabinet

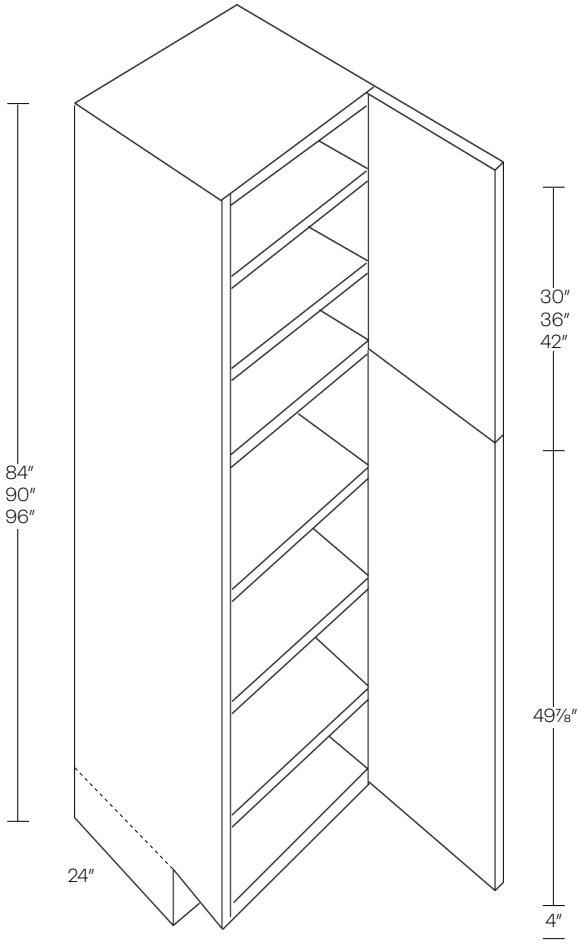

Item Number	E	F	H	I
UC1524X84	1995	2095	2495	2793
UC1524X90	2335	2452	2919	3268
UC1524X96*	2594	2724	3242	3629
UC1824X84	2078	2182	2599	2910
UC1824X90	2432	2554	3040	3406
UC1824X96*	2702	2838	3376	3782
POS15-3	707	707	707	707
POS15-4	954	954	954	954
POS18-3	825	825	825	825
POS18-4	1036	1036	1036	1036

- POS price is in addition to the cabinet list price
- POS will be factory installed
- POS has natural finish
- Soft-close glides for POS

* 84″ and 90″ has 2 upper shelves
* 96″ has 3 upper shelves
* Toe kick shipped loose

Pull Out Shelf

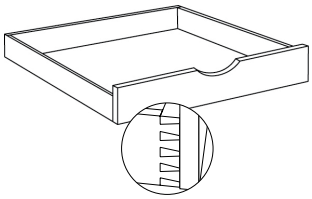

Double Door Utility Cabinet

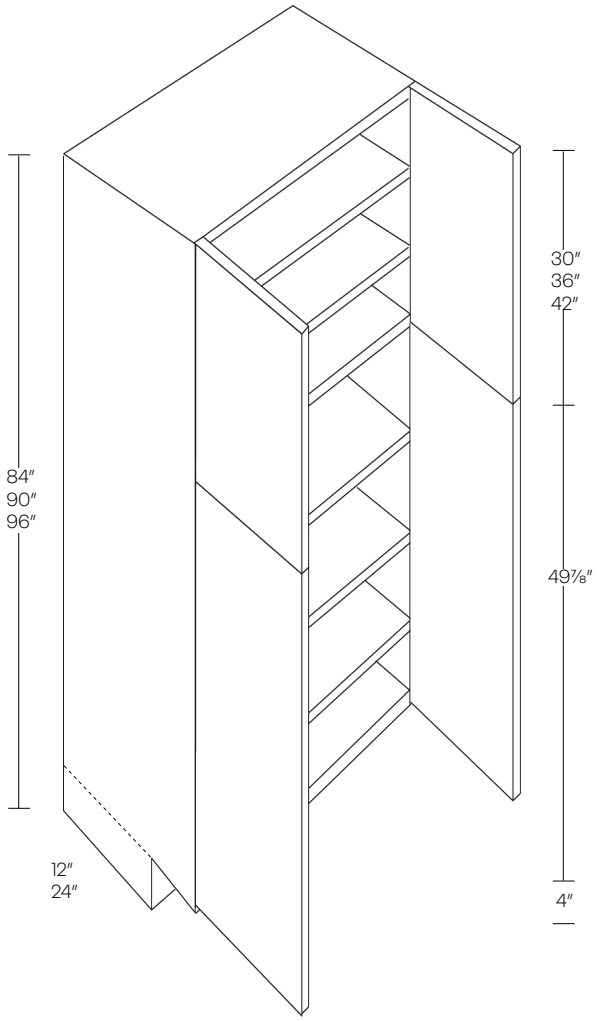

Item Number	E	F	H	I
UC2412X84	2319	2435	2900	3247
UC2412X90	2530	2657	3164	3542
UC2412X96*	2612	2743	3266	3658
UC2424X84	2393	2513	2993	3351
UC2424X90	2720	2856	3400	3809
UC2424X96*	3023	3175	3779	4232
UC3024X84	2754	2892	3441	3854
UC3024X90	3129	3286	3912	4381
UC3024X96*	3477	3651	4344	4867
POS24-3	942	942	942	942
POS24-4	1193	1193	1193	1193
POS30-3	1011	1011	1011	1011
POS30-4	1285	1285	1285	1285

- POS price is in addition to the cabinet list price
- POS will be factory installed
- POS has natural finish
- POS not available in 12″ deep UC
- Ball bearing glides for POS

* 84″ and 90″ has 2 upper shelves
* 96″ has 3 upper shelves
* Toe kick shipped loose

Pull Out Shelf

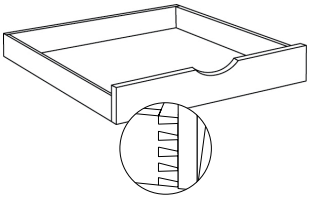

Oven Cabinet

Item Number	E	F	H	I
OV3084	2310	2426	2889	3236
OV3090	2454	2577	3069	3436
OV3096*	2599	2729	3249	3639

- Has 2 upper shelves
- Maximum vertical opening is 52.5″
- For double wall ovens, remove drawers as needed

*Toe kick shipped loose

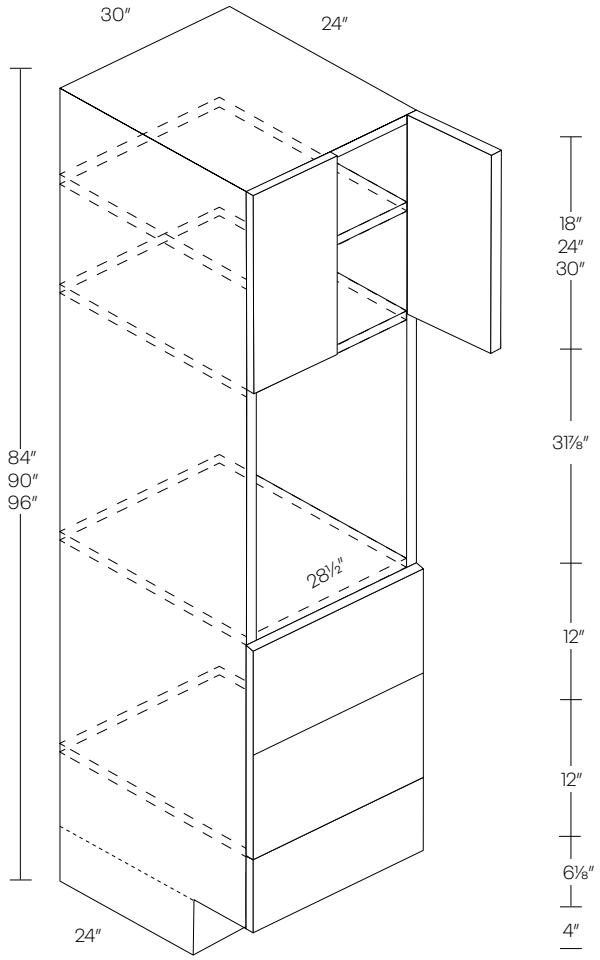

Bottom drawers open

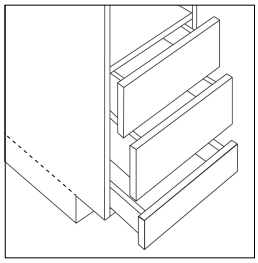

Side

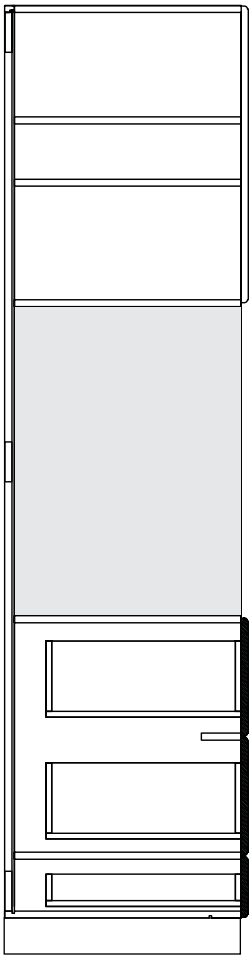

Field Modified
*for double oven, remove fixed shelf and bottom 12″ drawers

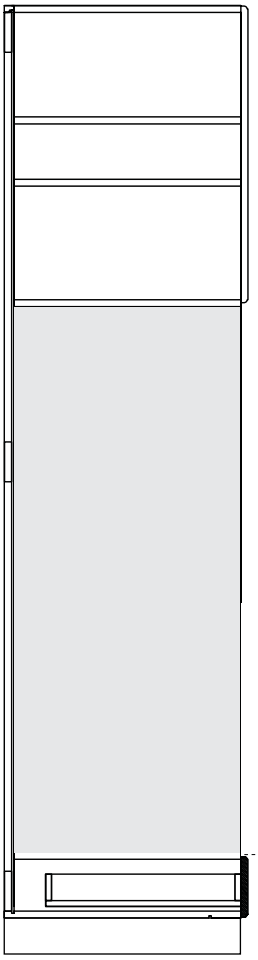

Pull Out Shelf

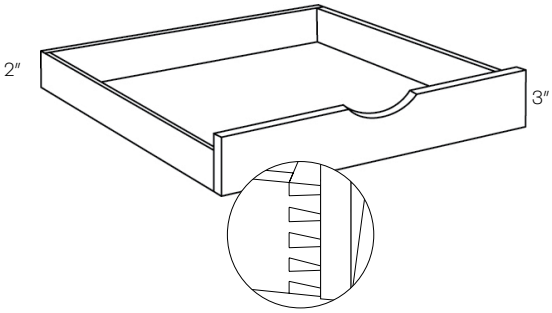

Item Number	E	F	H	I
POS12	198	198	198	198
POS15	207	207	207	207
POS18	228	228	228	228
POS21	240	240	240	240
POS24	271	271	271	271
POS27	282	282	282	282
POS30	294	294	294	294
POS33	307	307	307	307
POS36	329	329	329	329
POS42	345	345	345	345

- Ball bearing soft-close glides included
- POS uses dovetail construction
- Two spacers required
- Natural finish

1 Door Vanity Base Cabinet

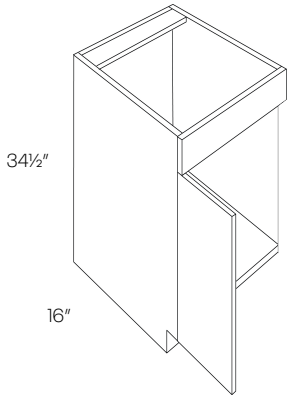

Item Number	E	F	H	I
V1816 (1 door)	360	378	450	503

• Dealer must order toe kick

2 Door Vanity Base Cabinet

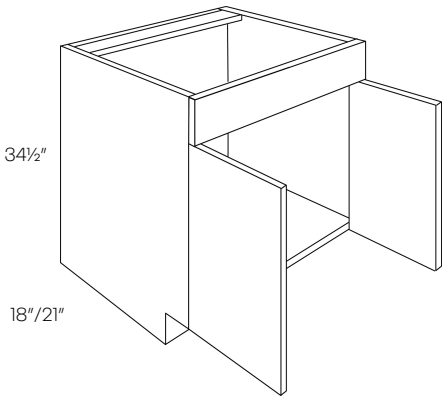

V2418	467	491	583	653
V3018	647	680	809	905
V24	551	579	688	770
V27	617	649	771	863
V30	683	718	853	955
V33	756	794	944	1058
V36	828	870	1035	1160

• Dealer must order toe kick

1 Door 2 Drawer Vanity Base Cabinet

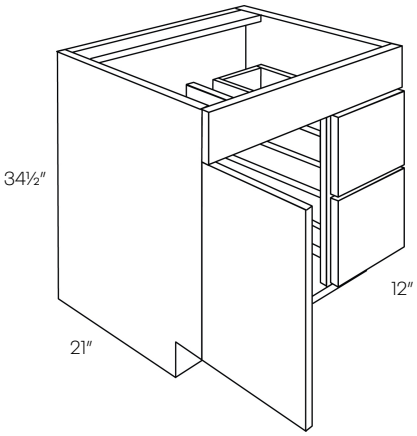

V24D	789	829	985	1104
V30D	900	945	1125	1262

• Right side drawers
• Dealer must order toe kick

2 Door 2 Drawer Vanity Base Cabinet

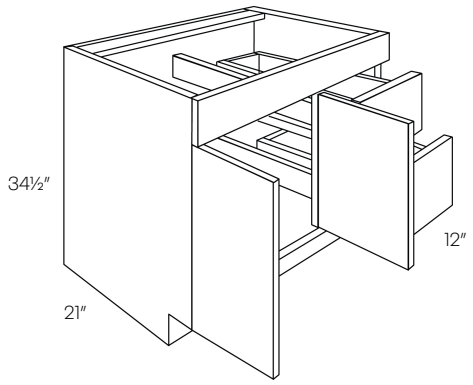

Item Number	E	F	H	I
V36D	1229	1291	1537	1721
V42D	1323	1390	1653	1852

- Right side drawers
- Dealer must order toe kick

2 Door & Drawer Vanity Base Cabinet

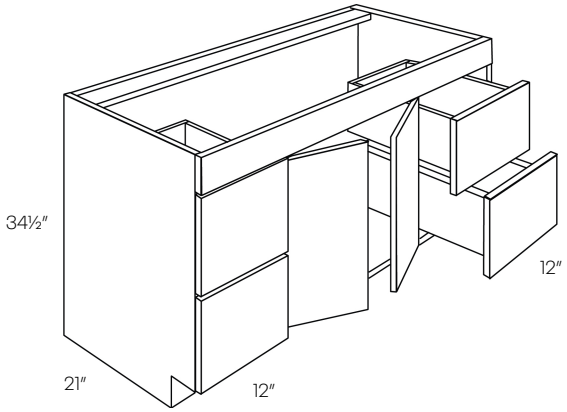

V48DD	1476	1550	1693	1896

- Dealer must order toe kick

Vanity Drawer Base Cabinet

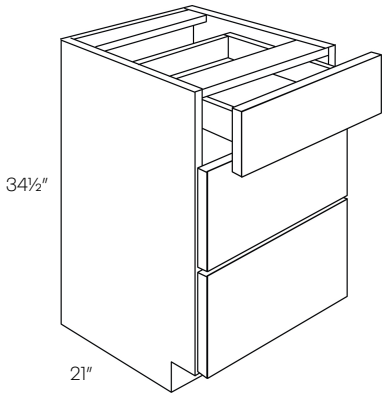

VDB12	833	875	1040	1166
VDB15	906	952	1133	1269
VDB18	991	1041	1238	1386

- Dealer must order toe kick

Filler

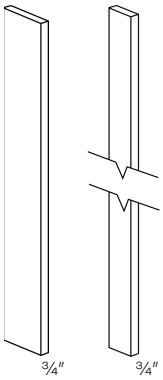

Item Number	E	F	H	I
F330	49	52	91	121
F330.5	69	73	111	141
F336	63	67	104	136
F342	90	95	129	160
F396	147	155	229	292
F630	70	74	112	142
F630.5	116	122	174	220
F636	95	100	136	166
F642	124	131	196	249
F696	194	204	362	487

- Overlays available for Alvic
- F330.5 for use with base cabinets
- Fillers finished on all 4 sides

Refrigerator & Dishwasher End Panel

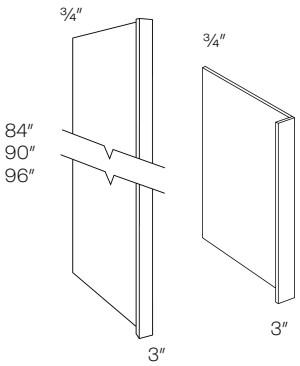

REP384	516*	542	N/A	N/A
REP390	535*	562	N/A	N/A
REP396	571*	600	N/A	N/A
DWR3	236*	243	N/A	N/A

- One side finished, other side white matte
- Overlays available for Alvic

End Panel

Item Number	E	F	H	I
BEP	228*	240	284	477
VEP	282		250	419
WEP30	145	N/A	N/A	N/A
WEP36	174	N/A	N/A	N/A
WEP42	203	N/A	N/A	N/A
UREP30	737*	774	943	1588
UREP24	853	774	755	1270
PANEL**	N/A	N/A	48	80

*WEP not sold individually
**Price per square foot
- Factory Installed
- All sides are finished

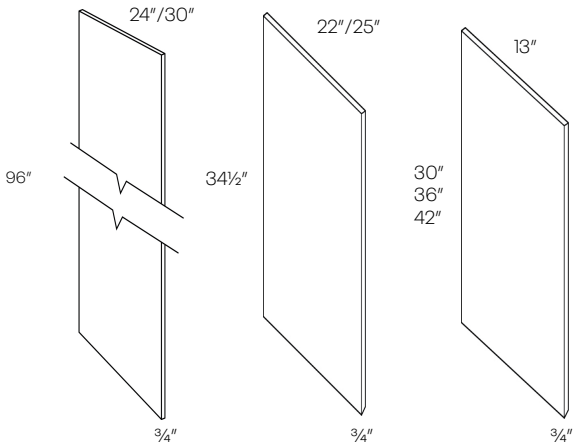

Column

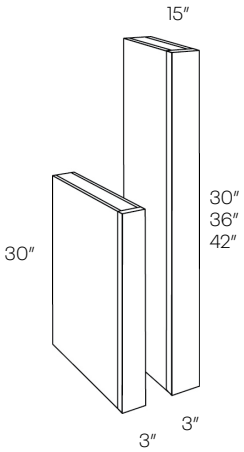

CLM-B30	627*	659	N/A	N/A
CLM-30X15	249*	262	N/A	N/A
CLM-36X15	332*	349	N/A	N/A
CLM-42X15	332*	349	N/A	N/A

- Finished 3 sides
- Trimable

Plywood Panel

Item Number	E	F	H	I
PLY4X8	808	849	N/A	N/A

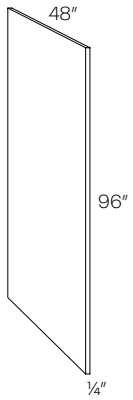

- One side finished, other side white matte

Scribe Molding

Item Number	E	F	H	I
SCM	78	N/A	N/A	N/A

- 8 Feet long

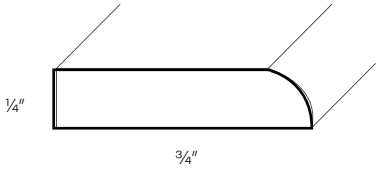

Contemporary Crown Molding

CCM	292	307	N/A	N/A

- 8 Feet long
- Outer ends are finished

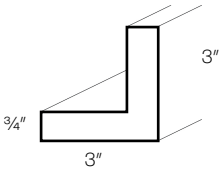

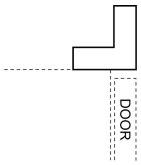

Suggested Use

Toe Kick

TKS	92	97	230	292

- 8 Feet long
- Matrix/Milano - 1/2″
- Alvic - 3/4″

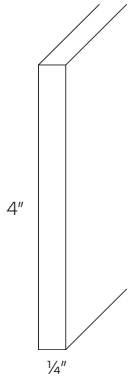

Corner Molding

OCM	118	N/A	N/A	N/A
ICM	118	N/A	N/A	N/A

- 8 Feet long

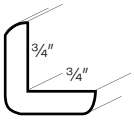

OCM

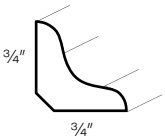

ICM

Edgeband

EDGEBAND	*	*	993	993

- Please call for pricing

* $1 per lineal foot

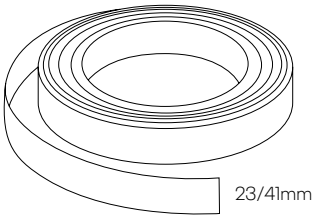

Matching Finished Side

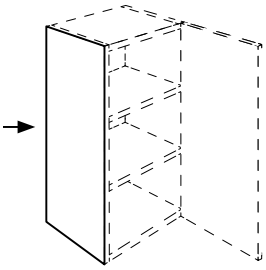

Item Number	E	F	H	I
BFP*	143		N/A	N/A
VFP*	124		N/A	N/A
WFP12*	44		N/A	N/A
WFP15*	51		N/A	N/A
WFP18*	57		N/A	N/A
WFP24*	59		N/A	N/A
WFP30*	64		N/A	N/A
WFP36*	79		N/A	N/A
WFP42*	87		N/A	N/A
TFP84*	359		N/A	N/A
TFP90*	384		N/A	N/A
TFP96*	411		N/A	N/A

• Factory applied only

Touch Up Kit

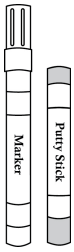

Item Number	E	F	H	I
TUP	100	100	N/A	N/A

Specifications and Prices

Vanity Collections

Vanguard Vanities

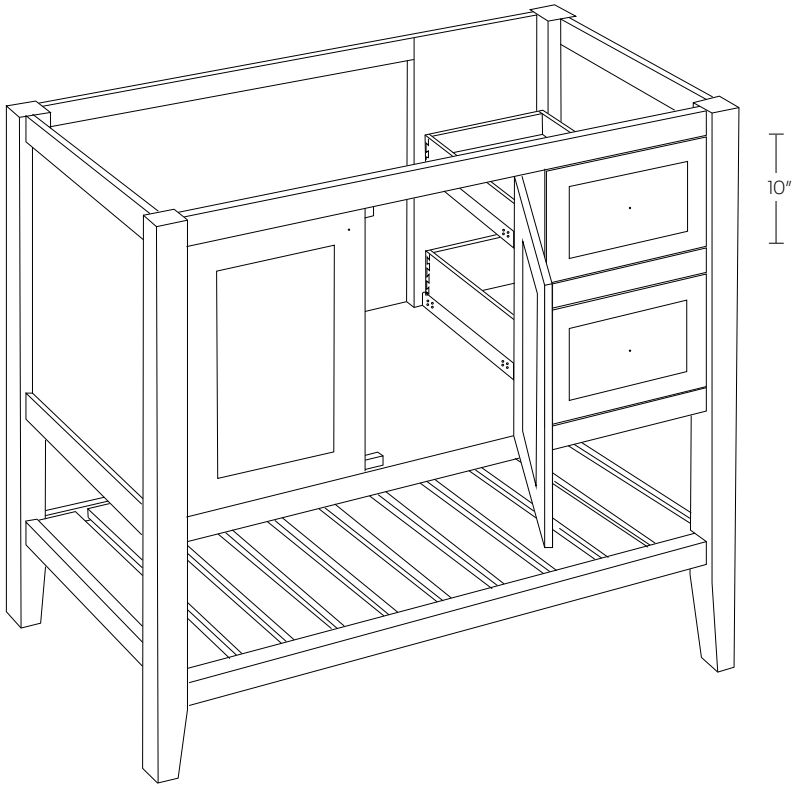

Interior — Finished with the same finish as the outside

Drawers — 5/8 ″ solid wood Dovetail sides 3/8″ thick bottom

Hinges — Heavy duty steel concealed adjustable soft close hinge.

Glides — High quality soft-close under-mount glides.

*Open back behind all doors

*Pre-drilled holes for hardware

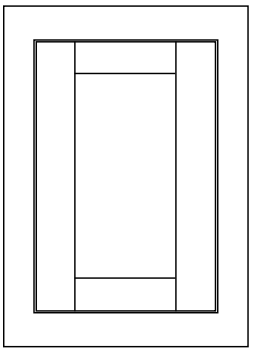

Finish	Price Code	Species
VG10 - White (paint)	V	Solid Wood
VG11 - Espresso (stain)	V	Solid Wood
VG22 - Dove (paint)	V	Solid Wood
VG26 - Indigo (paint)	V	Solid Wood

Bottom Drawer Vanity

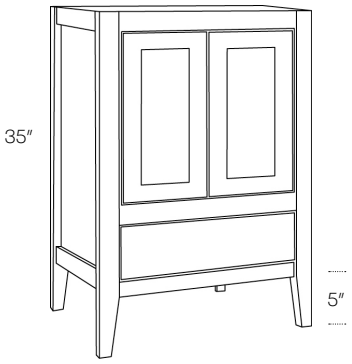

Item Number	V
VBD2421	838
VBD3021	887
VBD3621	1015

- Use tops pg. 164
- Open back
- Drawers are 3″ high inside

Double Bottom Drawer Vanity

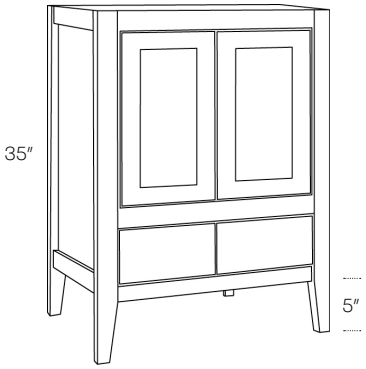

VBD4221	1442
VBD4821	1473

- Use tops pg. 164
- Open back
- Drawers are 3″ high inside

Open Bottom Vanity

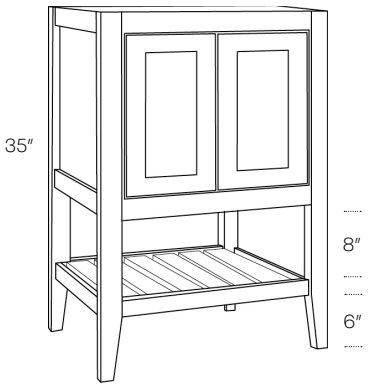

VOB2421	806
VOB3021	894
VOB3621	983
VOB4221	1071

- Use tops pg. 164
- Open back

Open Bottom Right Drawers Vanity

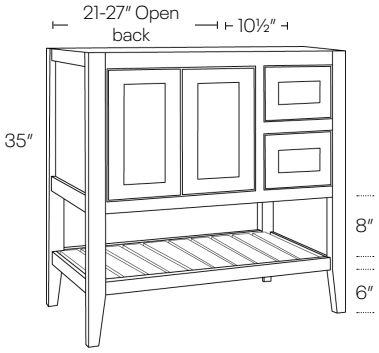

Item Number	V
VOB3621-DR	1251
VOB4221-DR	1374

- Use tops pg. 164
- Top drawer is 1⅜″ high inside
- Bottom drawer is 3″ high inside

Open Bottom Left Drawers Vanity

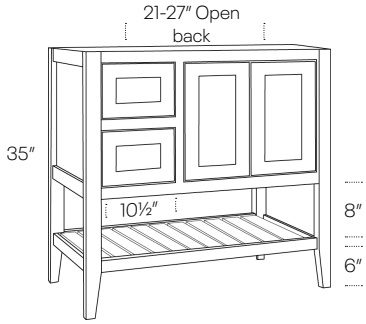

VOB3621-DL	1251
VOB4221-DL	1374

- Use tops pg. 164
- Top drawer is 1⅜″ high inside
- Bottom drawer is 3″ high inside

Open Bottom Double Drawers Vanity

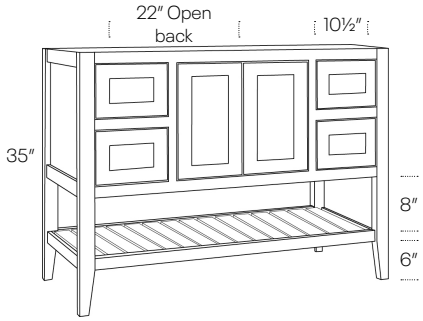

VOB4821-DD	1821

- Use tops pg. 164
- Top & bottom drawers are 3″ high inside

Bottom Drawer Vanity

Item Number	V
VBD6021-DC	2092

• Use tops pg. 164

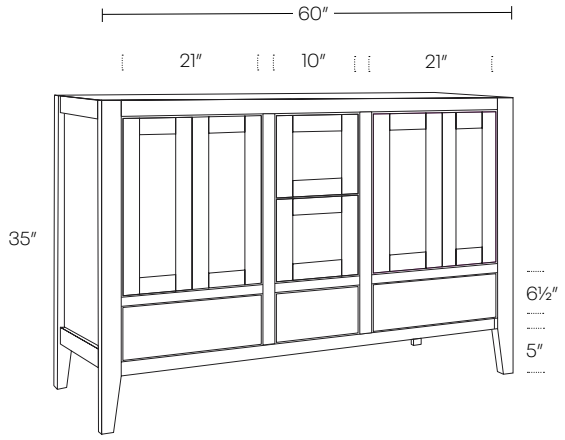

Double Drawers Vanity

Item Number	V
VDD3021	973
VDD3621	1185
VDD4221	1646

• Use tops pg. 164
• Open back
• Drawers cut for plumbing

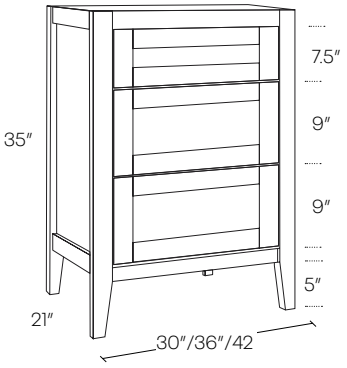

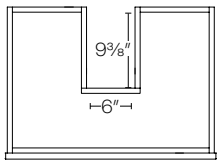

Open Bottom Vanity

VOB6021-DC	1909

• Use tops pg. 164

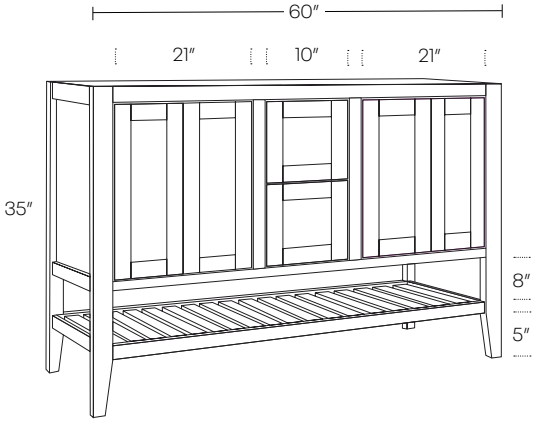

Mirror

MR1830	432
MR2430	543
MR3030	586
MR3630	647

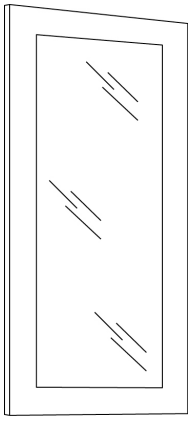

cnc cabinetry

Surelle Floating Vanities

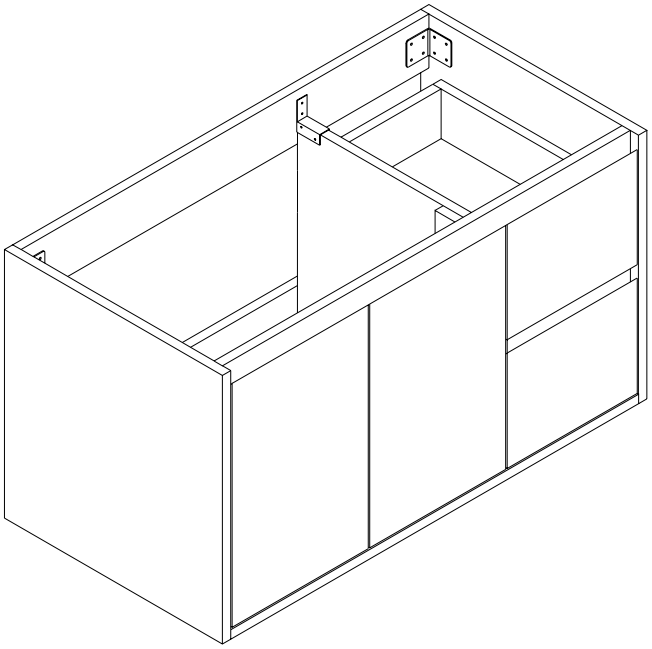

Interior — Finished with the same finish as the outside

Drawers — 5/8 ″ solid wood Dovetail sides 3/8″ thick bottom

Hinges — Heavy duty steel concealed adjustable soft close hinge.

Glides — High quality soft-close under-mount glides.

*Open back behind all doors

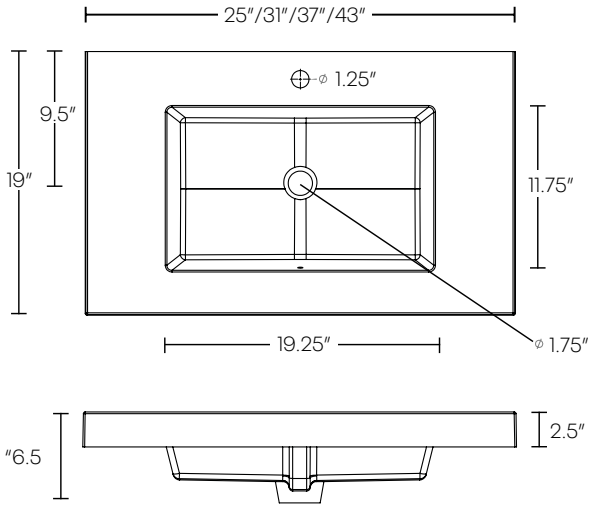

Finish	Price Code
SL30 - Bianca (gloss)	SL
SL31 - Grigio (gloss)	SL
SL32 - Cemento (texture)	SL
SL33 - Noce (texture)	SL

Double Door Floating Vanity

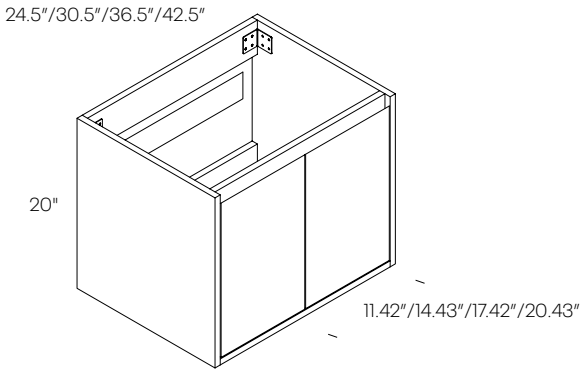

Item Number	Bianca SL30	Grigio SL31	Cemento SL32	Noce SL33
vanity base only				
V2418-20	581	580	404	414
V3018-20	653	652	448	459
V3618-20	724	722	491	503
V4218-20	796	793	534	548
vanity set				
V2418-20-FT*	1023	1022	847	856
V3018-20-FT*	1194	1193	989	1000
V3618-20-FT*	1302	1300	1069	1082
V4218-20-FT*	1418	1416	1157	1170

* FT items include vanity top

Double Drawer Floating Vanity

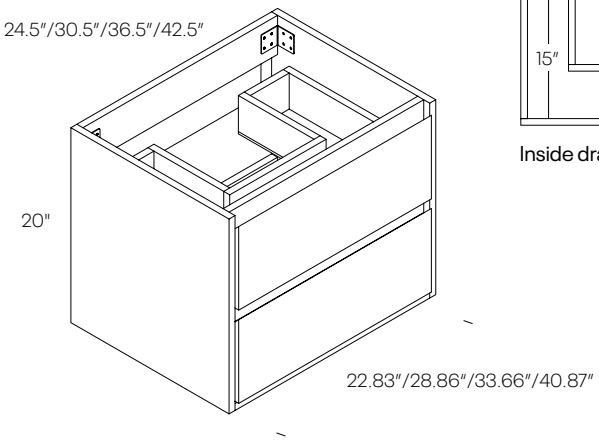

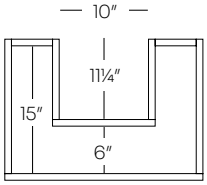

Inside drawer

vanity base only				
VDB2418-20	1080	1083	878	894
VDB3018-20	1179	1183	947	966
VDB3618-20	1294	1383	1027	1050
VDB4218-20	1377	1435	1086	1111
vanity set				
VDB2418-20-FT*	1522	1525	1320	1336
VDB3018-20-FT*	1720	1724	1488	1506
VDB3618-20-FT*	1872	1961	1606	1628
VDB4218-20-FT*	2000	2057	1709	1734

* FT items include vanity top
• Drawers cut for plumbing

Double Door and Drawer Floating Vanity

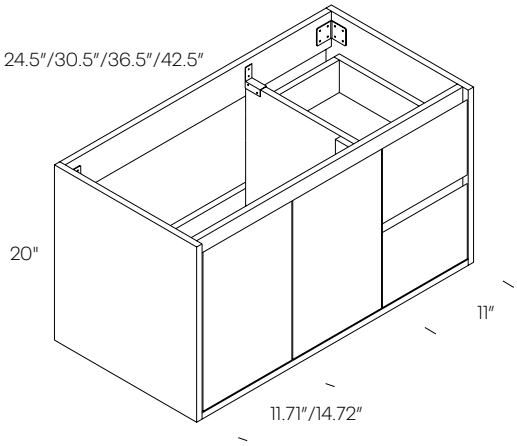

vanity base only				
V3618DL-20	1212	1212	944	960
V3618DR-20	1212	1212	944	960
V4218DL-20	1495	1290	994	1011
V4218DR-20	1495	1290	994	1011
vanity set				
V3618DL-20-FT*	1791	1791	1522	1539
V3618DR-20-FT*	1791	1791	1522	1539
V4218DL-20-FT*	2118	1913	1616	1634
V4218DR-20-FT*	2118	1913	1616	1634

* FT items include vanity top

Marble & Granite Countertops

Cultured Marble Top

MT

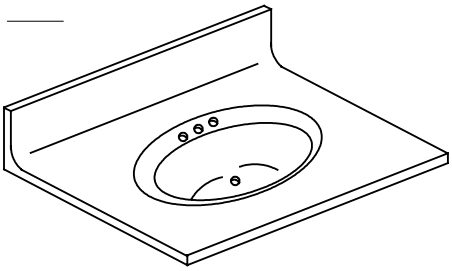

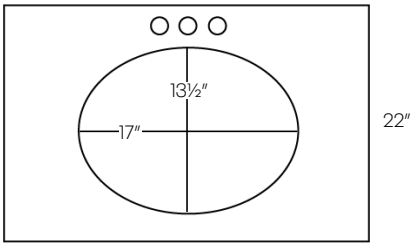

	White (MT-2)	Bisque (MT-3)
MT-1917	147	147
MT-2519	192	N/A
MT-3119	245	240
MT-2522	278	N/A
MT-3122	299	301
MT-3722	383	N/A
MT-4322	472	N/A
MT-4922	512	509
MTS2-2522	543	N/A
MTS2-3122	707	N/A
MTS2-3722	772	N/A
MTS2-4322	881	N/A
MTS2-4922	1047	N/A

***Sold only in the Northeast**
- Single bowl
- Sidesplash is universal
- Sidesplash not available on square topds

MTS

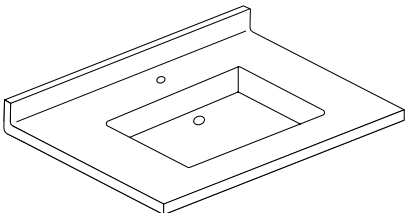

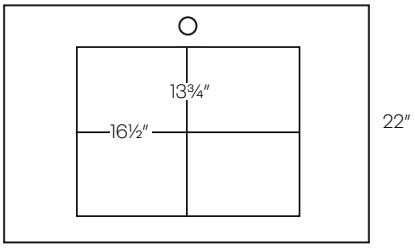

Granite Top

Includes:
- White porcelain undermount bowl (installed)
- Loose 4″ backsplash

* Center bowl - 4″ spread
** Center bowl - 8″ spread
*** Double bowl - 8″ spread

	Burlywood (GBWO)	Tiger Skin (GTSO)	Wheat (GWTO)	Cara White (GCWO)	Cara White (GCWS)	Absolute Black (GABO)	Gazian White (GGWS)
CGT-2522*	491	499	524	748	899	777	676
CGT-3122*	551	567	598	880	1058	914	743
CGT-3722**	603	632	662	997	1195	1053	808
CGT-4322**	653	700	735	1106	1327	1193	877
CGT-4922**	739	781	821	1265	1518	1367	947
CGT-6122	843	911	956	1491	1994	1581	1426
SDSP-22 (side splash)	47	47	47	89	89	96	72
6X6-SP (sample)	13	13	13	13	13	13	13

***Sold only in the Northeast**
- GCWS is square
- Sidesplash not available on Sqaure tops
- Absolute Black (GABO) - While Supplies last

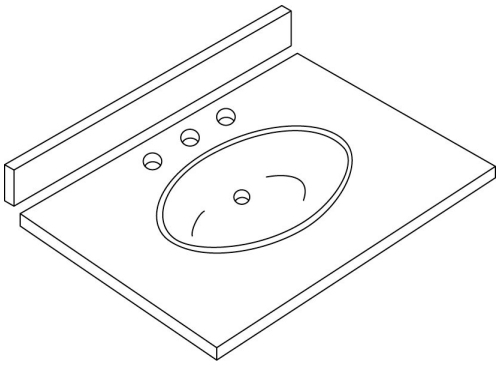

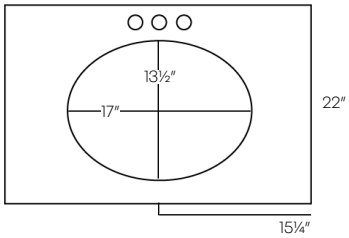

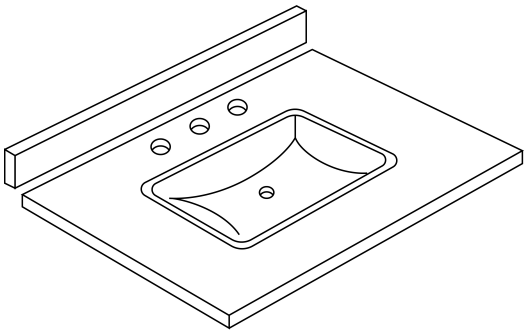

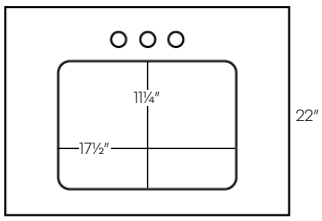

- 20% upcharge
- Only Available in CW and GGW

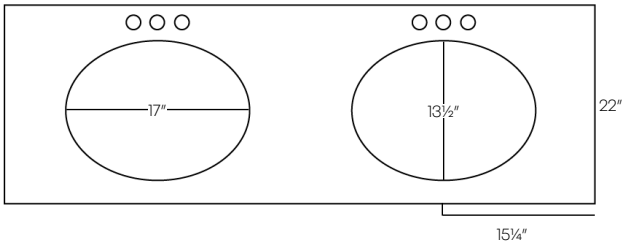

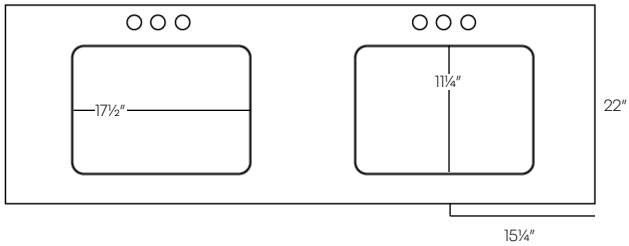

Modifications & Upgrades

Only available on items shipped from the New Jersey warehouse

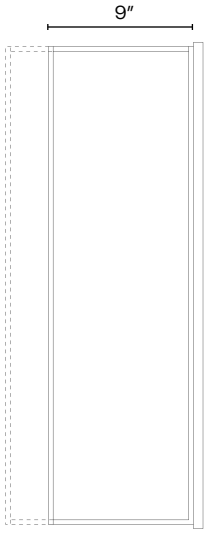

Wall Cabinet

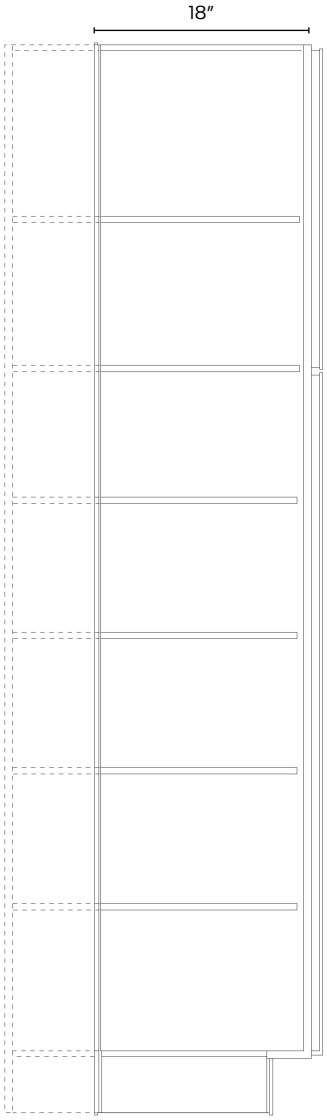

Tall Cabinet

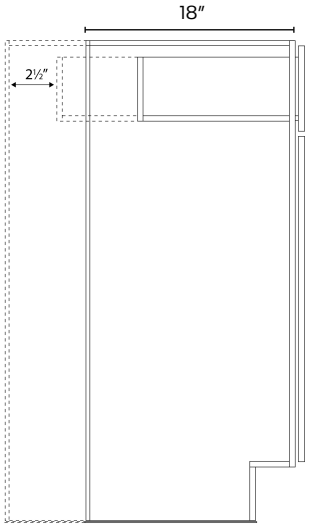

Base Cabinet

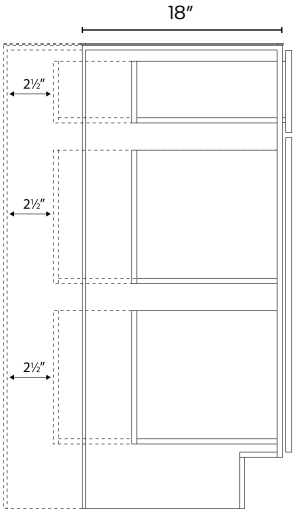

Drawer Base Cabinet

*Dovetail not in back
*Classic only - RD to 21″

Cut Down Depth	Description	List Price
CT-BCUT*	Base cabinet, cut down depth	572
CT-DBCUT*	Drawer base cabinet, cut down depth	806
CT-TCUT*	Tall cabinet, cut down depth	806
CT-WCUT**	Wall cabinet, cut down depth	460

*Can be cut down to 9″, 12″, 15″, 18″ & 21″ | **Can be cut down to 6″, 9″ & 11″
*All 9″ Base Cabinets will have a dummy drawer front
*All 12″ Classic Base Cabinets will have a dummy drawer front

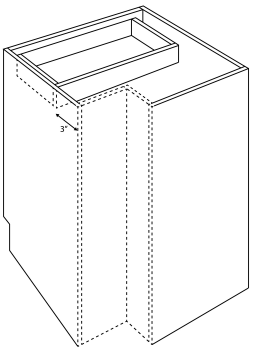

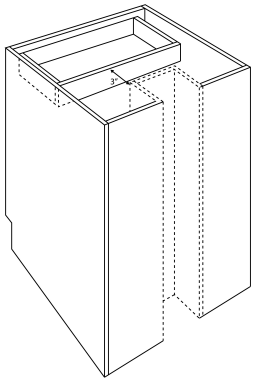

Base Cabinet

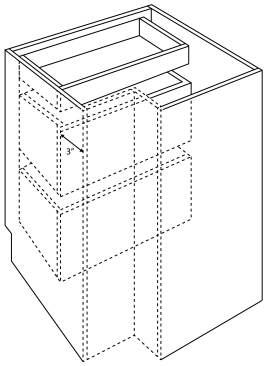

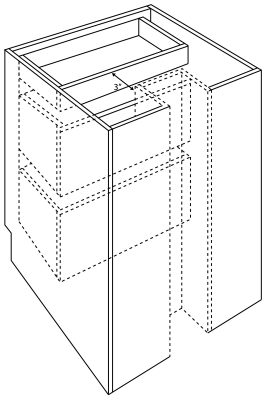

Drawer Base Cabinet

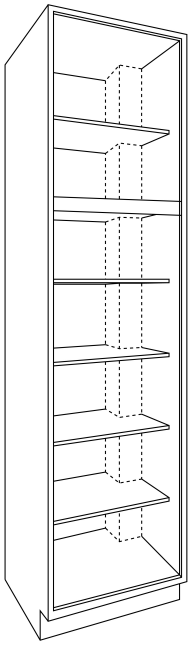

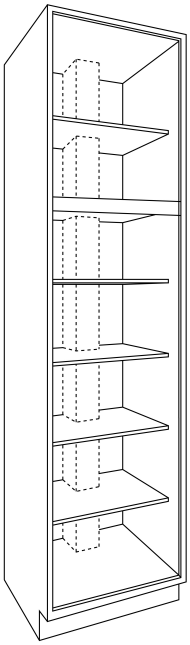

Tall Cabinet

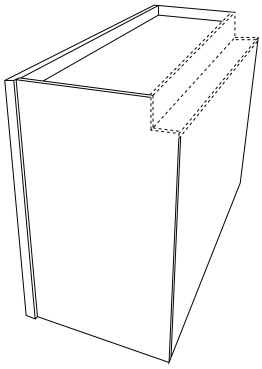

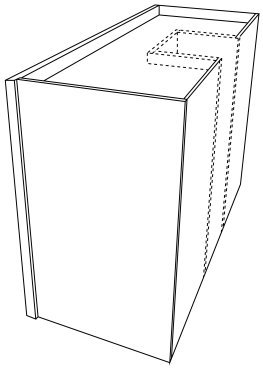

Wall Cabinet

Chase Cuts	Description	List Price
CT-BCHASE	Base cabinet, chase cut	920
CT-DBCHASE	Drawer base cabinet, chase cut	1142
CT-TCHASE	Tall cabinet, chase cut	1266
CT-WCHASE	Wall cabinet, chase cut	806

•Non-stock cabinets, custom modifications, wood hoods and countertops (post form and self-edge) are not returnable.
•Must provide accurate drawings with your order
•Only available in NorthEast

	Item	Description	List Price
Door cut for glass	**CT-DCG**	Door cut for glass	185
	CT-DCG-GLI	Door cut and insert glass	381
	CT-DCG-GLI-F	Door cut and insert frosted glass	576
	CT-GLI	Glass Insert	179
	CT-GLI-F	Frosted glass insert	392

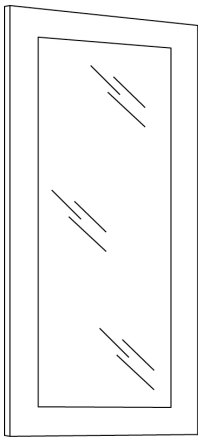

•Loose glass not for sale
•Luxor modifications to be done only on purchased cabinets.

*Loose doors only available in Concord
**Per door cost shown above

Finished Interior	**CT-FINISH**	Finished Interior	50% Up-charge

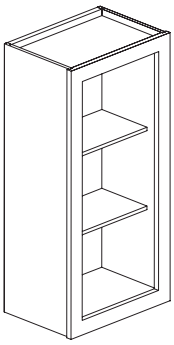

•Available only for Wall Cabinets in Concord Collection
•Only available in North East

Base Cabinet to Sink Base	**CHARGE-SINK BASE**	Base to Sink Base	210

	Item	Description	List Price
Remove Toe Kick	**CT-HANDICUT**	Base cabinet, cut off toe kick	116

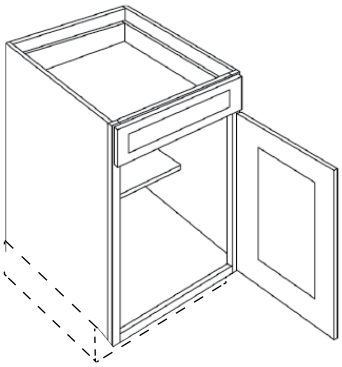

Cut and Send Toe Kick	**CT-HANDICUT**	Base cabinet, cut off toe kick and ship	116

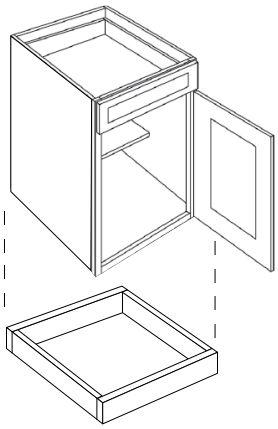

Wall	**CT-EXDW**	Extended depth wall	806

- Can only be extended to 15″, 18″, 21″ & 24″
- Only available for Classic & Concord

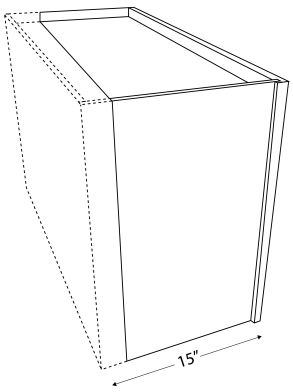

Cabinet Care & Warranty

Treat your Cabinets with Care:

- Use a soft cotton cloth.
- Do not use abrasive materials (including paper towels).
- Only use soap and warm water.
- Do not spray directly onto the cabinets.
- Do not use any chemicals.
  (Note, when using a spray for other items placed near your cabinetry, be careful not to overspray on your cabinets)
- Wipe spills promptly and do not leave wet items against the wood.
- Clean glass doors with a glass cleaner.
  (Be careful not to overspray on the wood)
- You can repair small nicks and scratches with our touch up kits.
- Waxing and polishing is not recommended as this can create a film or wax build up on your cabinets.
- You can dust your cabinets with a lightly damp cloth.
  (Follow the grain of the wood wiping across can cause scratches)

Humidification effects on door with a Miter Joint

High Humidity

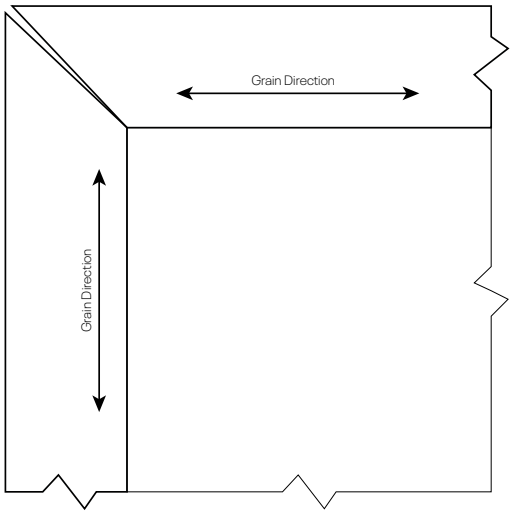

When wood swells, miter joints open as shown above

Low Humidity

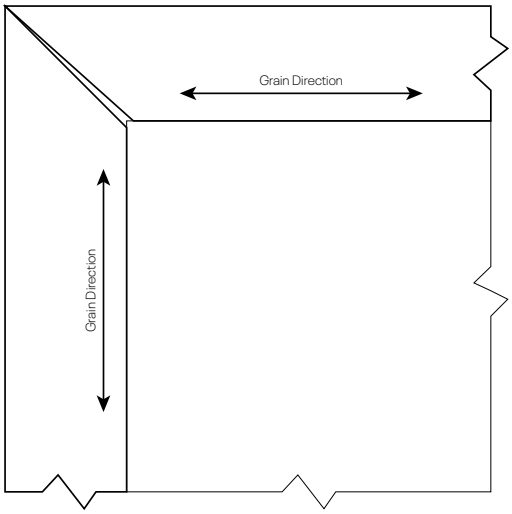

When wood shrinks, miter joints open as shown above

* Humidification is normal and is not considered a need for replacement.

Five Year Limited Warranty:

CNC Cabinetry Inc. warrants to the original purchaser that all Luxor, Country, Concord and Classic, Vanguard, and Surelle Collections will be free from defects in material and/or workmanship under normal use for five years from the time of purchase. Please note: Natural variations in wood grain or color may cause your cabinet to not exactly match the original sample or be exactly the same as one another, this is due to the natural characteristics of wood grain and color. Additionally, the characteristic of wood is to expand and contract over time. As such hairline cracks and/or finish stress lines may become visible on painted or stained mitered doors or wooden joints, and is not considered a defect. During this period of time, CNC Cabinetry Inc. will repair or replace at our discretion, any cabinet or component that proves to be defective in material and/or workmanship under proper installation and normal use. This warranty does not apply to any damage that has occurred due to accident, misuse, or improper handling or cleaning of the cabinetry. Cabinetry that is stored or placed in a humid environment will not be covered under this warranty. This warranty does not apply to cabinetry that has been altered, modified, improperly installed or serviced by any unauthorized service agency. This warranty is limited to the replacement of defective parts only and does not include service, labor, or transportation charges related to the removal or installation of the defective or replacement parts. This warranty is limited to the original buyer only. This warranty does not apply to any products used in conjunction with the cabinetry, such as countertops, appliances, or plumbing fixtures. Repair or replacement is subject to the current product offerings of styles and construction of CNC Cabinetry Inc. at that time. If a warranty claim is filed after a product becomes unavailable, CNC Cabinetry Inc. will replace that part with a part of the same or similar style based on availability. No dealer, agent, contractor, or installer has any right to change or extend the above warranty. These warranty statements only, are the expressed warrants extended by CNC Cabinetry Inc. In lieu of any other warranties, this warranty shall constitute the entire liability of CNC Cabinetry Inc. All styles, finishes, hardware and specifications are also subject to change without prior notice. CNC Cabinetry Inc. is not responsible for any typographical errors.